Two Switch & Trunk Button

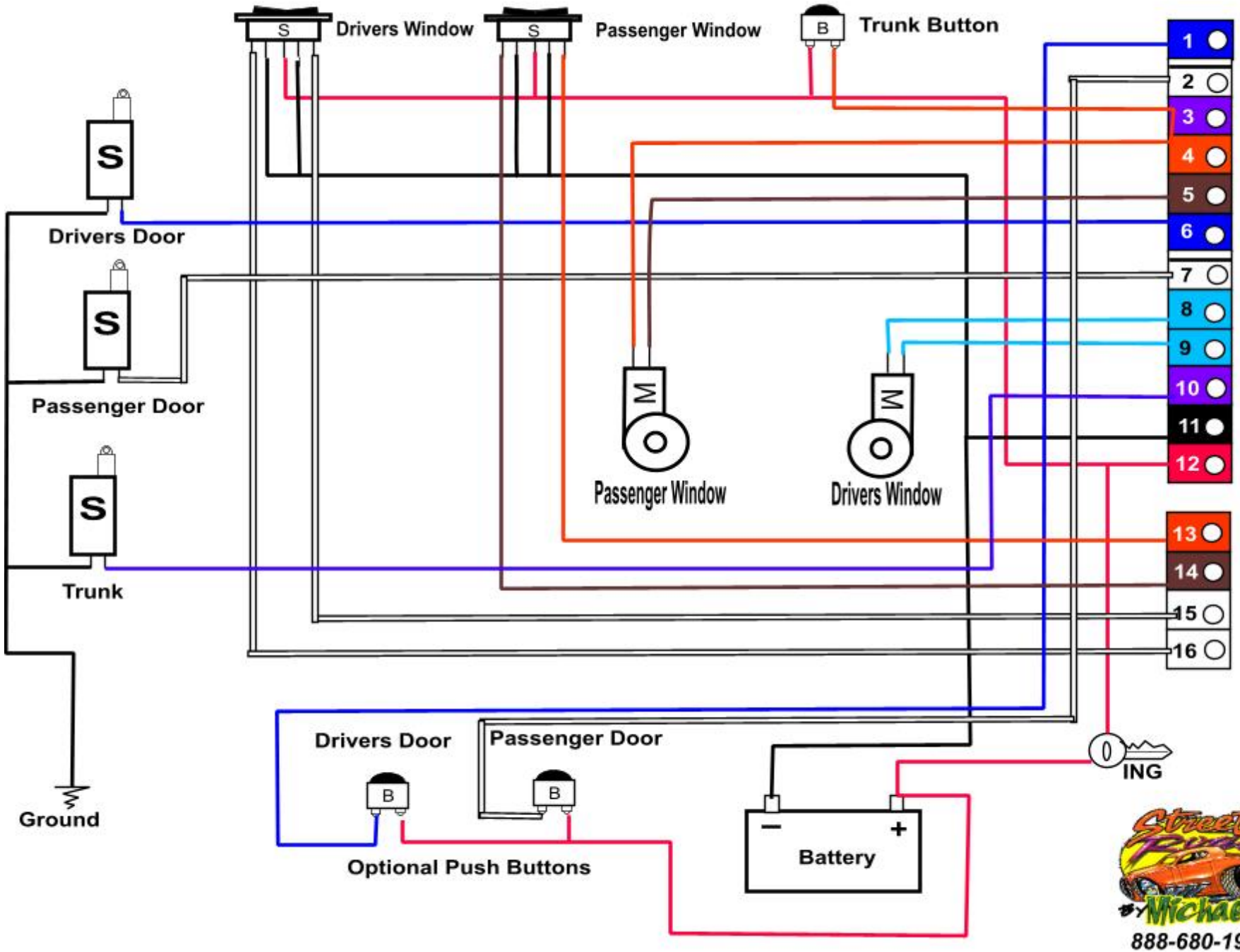

888-680-1932

www.srbymichael.com