an ISO 9001:2008 Registered Company

1979-81 CAMARO

w/o FACTORY AIR

561180

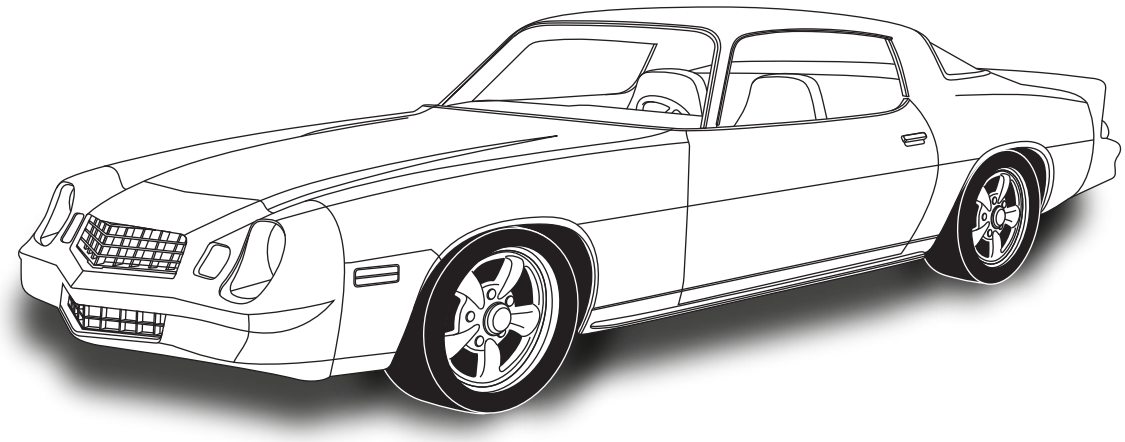

18865 GOLL ST. - SAN ANTONIO, TX. - 78266 ph.210-654-7171 - fax 210-654-3113

Table of Contents

PAGES

1. COVER
2. TABLE OF CONTENTS
3. PACKING LIST / PARTS DISCLAIMER
4. INFORMATION PAGE
5. WIRING NOTICE
6. ENGINE COMPARTMENT, CONDENSER ASSEMBLY & INSTALLATION, COMPRESSOR & BRACKETS, PULLEYS
   FIGURE 1
7. PASSENGER COMPARTMENT
   FIGURES 2 & 3
8. PASSENGER SIDE KICK PANEL MODIFICATION
   FIGURES 4 & 4a
9. DEFROST DUCT/ FRESH AIR COVER INSTALLATION & HOSE ADAPTER INSTALLATION
   FIGURES 5, 5a & 6
10. FRESH AIR COVER INSTALLATION & KICK PANEL FRESH AIR CAP INSTALLATION
    FIGURES 7, 8, 8a & 8b
11. FIREWALL COVER & EVAPORATOR BRACKET AND AC & HEATER HOSE INSTALLATION
    FIGURES 9 & 10
12. EVAPORATOR BRACKET AND HEATER FITTING INSTALLATION CONT.
    FIGURE 11
13. EVAPORATOR INSTALLATION
    FIGURES 12 & 12a
14. CENTER LOUVER INSTALLATION & DRAIN HOSE INSTALLATION
    FIGURES 13 & 14
15. LUBRICATING O-RINGS, STANDARD HOSE KIT, & MODIFIED A/C HOSE KIT
    FIGURE 15
16. HEATER HOSE & HEATER CONTROL VALVE INSTALLATION
    FIGURE 16
17. FINAL STEPS AND GLOVE BOX INSTALLATION
    FIGURES 17, 18 & 18a
18. CONTROL PANEL & DUCT HOSE ROUTING
    FIGURE 19
19. WIRING DIAGRAM
20. GEN IV WIRING CONNECTION INSTRUCTION
21. OPERATION OF CONTROLS
22. TROUBLE SHOOTING INFORMATION
23. TROUBLE SHOOTING INFORMATION CONT.
24. KICK PANEL MODIFICATION TEMPLATE
25. GLOVE BOX LIGHT TEMPLATE
26. EVAPORATOR KIT PACKING LIST

EVAPORATOR KIT PACKING LIST

EVAPORATOR KIT
561180

NO.	QTY.	PART NO.	DESCRIPTION
1.	1	744004-VUE	GEN IV 4 VENT EVAP. SUB CASE w/ 204 ECU
2.	1	781173	1979-81 CAMARO w/o AC ACC. KIT

**** BEFORE BEGINNING INSTALLATION OPEN ALL PACKAGES AND CHECK CONTENTS OF SHIPMENT. PLEASE REPORT ANY SHORTAGES DIRECTLY TO VINTAGE AIR WITHIN 15 DAYS. AFTER 15 DAYS, VINTAGE AIR WILL NOT BE RESPONSIBLE FOR MISSING OR DAMAGED ITEMS.**

1

GEN IV 4 VENT EVAP. SUB CASE w/ 204 ECU 744004-VUE

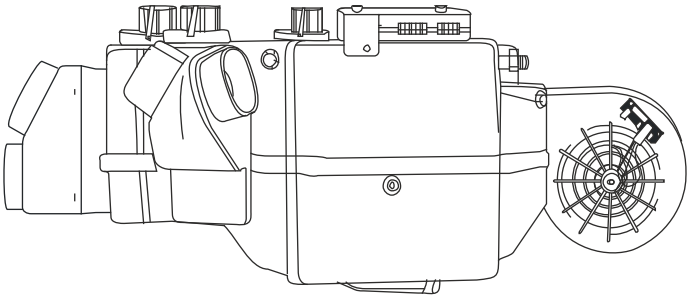

2

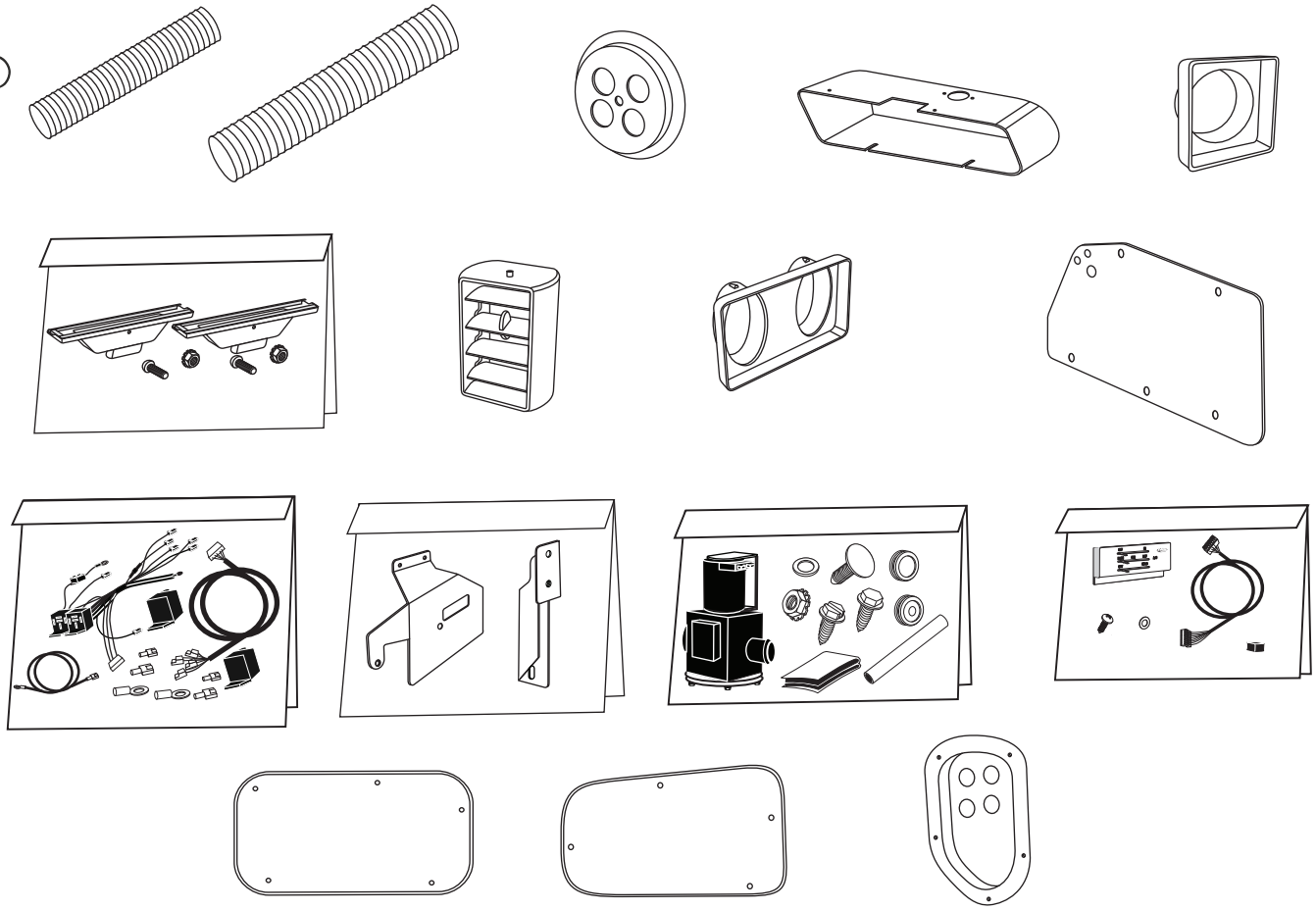

ACCESSORY KIT 781173

NOTE: IMAGES MAY NOT DEPICT ACTUAL PARTS AND QUANTITIES. REFER TO PACKING LIST FOR ACTUAL PARTS AND QUANTITIES.

Important Notice—Please Read

For Maximum System Performance, Vintage Air Recommends the Following:

Heater Hose (Not Included With This Kit):

Heater hose may be purchased from Vintage Air (Part# 31800-VUD) or your local parts retailer. Routing and required length will vary based on installer preference.

Bolts Passing Through Firewall:

To ensure a watertight seal between the passenger compartment and the vehicle exterior, for all bolts passing through the firewall, Vintage Air recommends coating the threads with silicone prior to installation.

Safety Switches:

Your Vintage Air system is equipped with a binary pressure safety switch. A binary switch disengages the compressor clutch in cases of extreme low pressure conditions (Refrigerant Loss) or excessively high head pressure (406 PSI) to prevent compressor damage or hose rupture. A trinary switch combines Hi/Lo pressure protection with an electric fan operation signal at 254 PSI, and should be substituted for use with electric fans. Compressor safety switches are extremely important since an A/C system relies on refrigerant to carry lubrication through the system.

Service Info:

Attention: The following system components are capped: Compressor, evaporator, condenser & drier. Caps may be under pressure with dry nitrogen. Be careful removing caps. Do not remove caps prior to installation. Removing caps prior to installation will cause components to collect moisture and lead to premature failure and reduced performance.

Evacuate the system for 35-45 minutes with system components (Drier, compressor, evaporator and condenser) at a temperature of at least 85° F. On a cool day, the components can be heated with a heat gun OR by running the engine with the heater on before evacuating. Leak check and charge to specifications.

Vintage Air Systems Are Designed to Operate With R134a Refrigerant Only! Use of Any Other Refrigerants Is a Fire Hazard and Could Damage Either Your Air Conditioning System or Your Vehicle.

Use of Any Other Refrigerants Will Void All Warranties of the Air Conditioning System and Components. Use of the Proper Type and Amount of Refrigerant Is Critical to Proper System Operation. Vintage Air Recommends Our Systems Be Charged By Weight With a Quality Charging Station or Scale.

Refrigerant Capacity for Vintage Air Systems:

(For other systems, consult manufacturer's guidelines)

R134a System

Charge with 1.8 lbs. (1 lb., 12 oz.) of refrigerant.

Lubricant Capacities:

New Vintage Air-supplied Sanden Compressor: No additional oil needed (Compressor is shipped with proper oil charge).

Important Wiring Notice—Please Read

Some Vehicles May Have Had Some or All of Their Radio Interference Capacitors Removed. There Should Be a Capacitor Found At Each of the Following Locations:

1. On the positive terminal of the ignition coil.
2. If there is a generator, on the armature terminal of the generator.
3. If there is a generator, on the battery terminal of the voltage regulator.

Most alternators have a capacitor installed internally to eliminate what is called "whining" as the engine is revved. If whining is heard in the radio, or just to be extra cautious, a radio interference capacitor can be added to the battery terminal of the alternator.

It is also important that the battery lead is in good shape and that the ground leads are not compromised. There should be a heavy ground from the battery to the engine block, and additional grounds to the body and chassis.

If these precautions are not observed, it is possible for voltage spikes to be present on the battery leads. These spikes come from ignition systems, charging systems, and from switching some of the vehicle's other systems on and off. Modern computer-operated equipment can be sensitive to voltage spikes on the power leads, which can cause unexpected resets, strange behavior, and/or permanent damage.

Vintage Air strives to harden our products against these types of electrical noise, but there is a point where a vehicle's electrical system can be degraded so much that nothing can help.

Radio interference capacitors should be available at most auto and truck parts suppliers. They typically are cylindrical in shape, a little over an inch long, a little over a half inch in diameter, and they have a single lead coming from one end of the cylinder with a terminal on the end of the wire, as well as a mounting clip which is screwed into a good ground on the vehicle. The specific value of the capacitance is not too significant in comparison to ignition capacitors that are matched with the coil to reduce pitting of the points.

- Care must be taken, when installing the compressor lead, not to short it to ground. The compressor lead must not be connected to a condenser fan or to any other auxiliary device. Shorting to ground or connecting to a condenser fan or any other auxiliary device will cause severe damage to the ECU.
- When installing ground leads on Gen IV systems, the blower control ground and ECU ground must be connected directly to the negative battery post.
- The heater control valve is a normally open valve. It must be connected to the ECU to block water flow in MAX A/C mode.

BEFORE STARTING THE INSTALLATION, CHECK THE FUNCTION OF THE VEHICLE (HORN, LIGHTS,ETC.) FOR PROPER OPERATIONS. STUDY THE INSTRUCTIONS, ILLUSTRATIONS, & DIAGRAMS.

ENGINE COMPARTMENT

REMOVE THE FOLLOWING:

- ☐ BATTERY AND BATTERY TRAY (RETAIN). SEE FIGURE 1.
- ☐ DRAIN RADIATOR
- ☐ HOOD LATCH ASSEMBLY (RETAIN) INCLUDING HOOD LATCH SUPPORT
- ☐ HEATER BLOWER MOTOR ASSEMBLY (DISCARD). TO REMOVE THE HEATER BLOWER MOTOR ASSEMBLY (UNDER HOOD) AND THE AIR DISTRIBUTION SYSTEM (UNDER DASH), REMOVE INNER FENDER. SEE FIGURE 3.
- ☐ OEM HEATER HOSES (DISCARD). SEE FIGURE 1.
- ☐ REMOVE OEM HEATER WIRING/VACUUM HARNESS MOLDED GROMMET. SEE FIGURE 1.

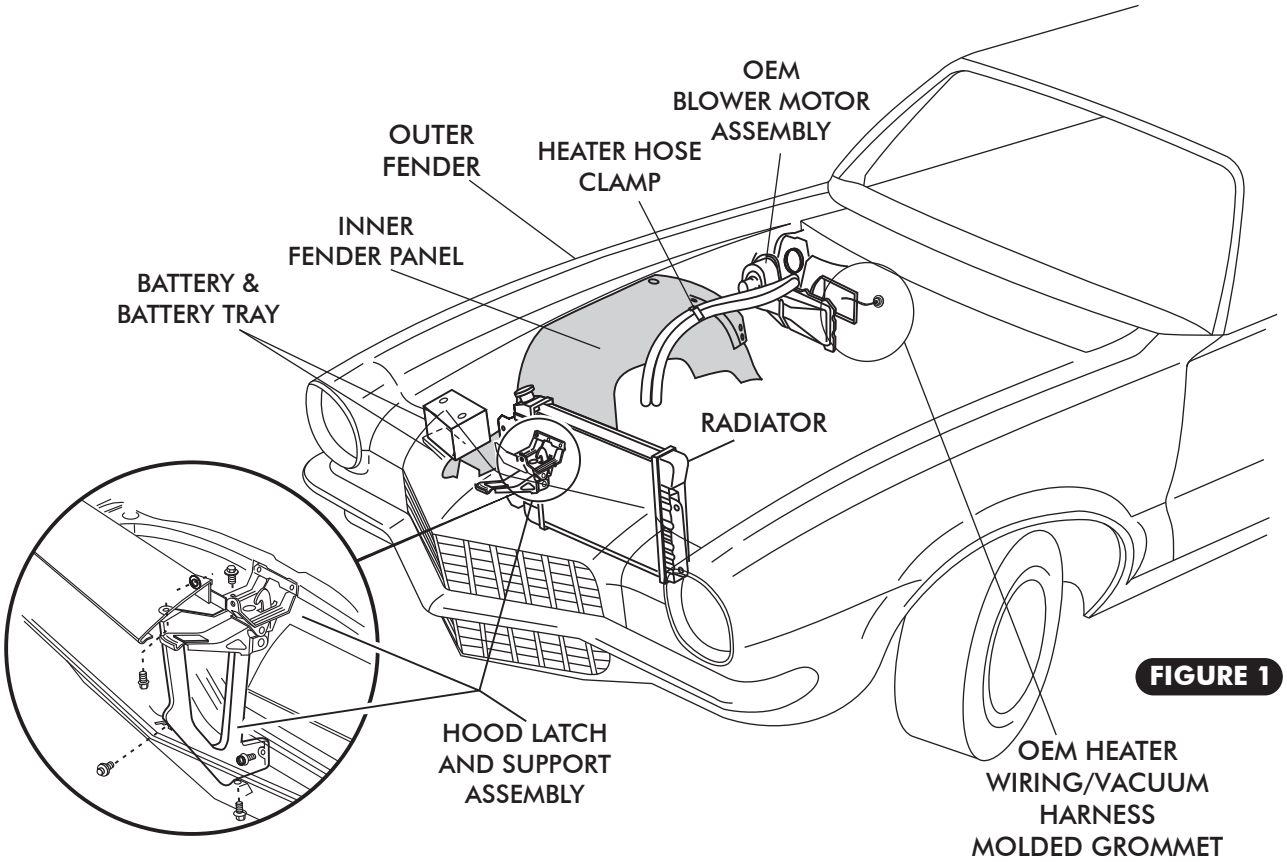

FIGURE 1

CONDENSER ASSEMBLY & INSTALLATION

- ☐ REFER TO SEPARATE INSTRUCTIONS INCLUDED WITH THE CONDENSER KIT TO INSTALL THE CONDENSER.
- ☐ BINARY SWITCH INSTALLATION (REFER TO CONDENSER INSTRUCTIONS)

COMPRESSOR & BRACKETS

- ☐ REFER TO SEPARATE INSTRUCTIONS INCLUDED WITH THE BRACKET KIT TO INSTALL THE COMPRESSOR BRACKET.

PULLEYS

- ☐ IN MOST INSTANCES THE BELT LENGTHS WILL REMAIN THE SAME.

PASSENGER COMPARTMENT

NOTE: REMOVAL OF DASHBOARD IS NOT REQUIRED TO INSTALL THE EVAPORATOR. VINTAGE AIR RECOMMENDS THAT YOU UTILIZE THE FACTORY SERVICE MANUAL WHEN YOU DISASSEMBLE AND REASSEMBLE THE DASHBOARD.

REMOVE THE FOLLOWING:

- ☐ GLOVE BOX DOOR. SEE FIGURE 3
- ☐ GLOVE BOX (DISCARD, RETAIN SCREWS). SEE FIGURE 2
- ☐ HEATER ASSEMBLY AND ALL RELATED DUCTING (DISCARD), RETAIN SCREWS. SEE FIGURE 3.
- ☐ DR/ PASS SIDE LOUVER OUTLETS (RETAIN). INSTRUMENT PANEL MUST BE REMOVED TO GET TO LEFT OUTLET, AND CONTROL PANEL. SEE FIGURE 3.
- ☐ CONTROL PANEL ASSEMBLY (DISCARD). SEE FIGURE 3. REFER TO CONTROL PANEL CONVERSION KIT INSTRUCTIONS FOR INSTALLATION OF CONTROLS.
- ☐ REMOVE PASS SIDE KICK PANEL (RETAIN). DISCONNECT PASS SIDE FRESH AIR CABLE FROM PANEL SEE FIGURE 3. DISCONNECT DR/ PASS CABLE ASTRO-VENTILATION DUCTING (DISCARD).
- ☐ REMOVE OEM DEFROST DUCT ASM.(DISCARD)

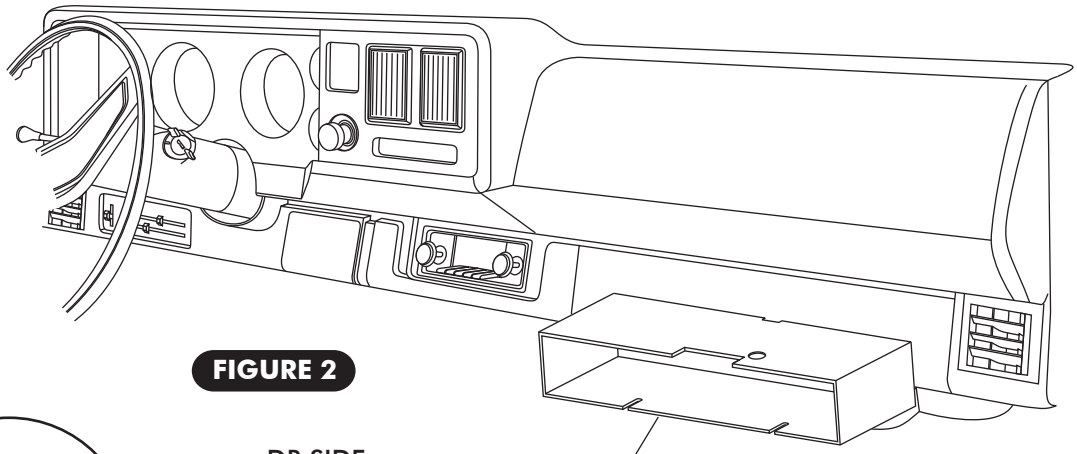

FIGURE 2

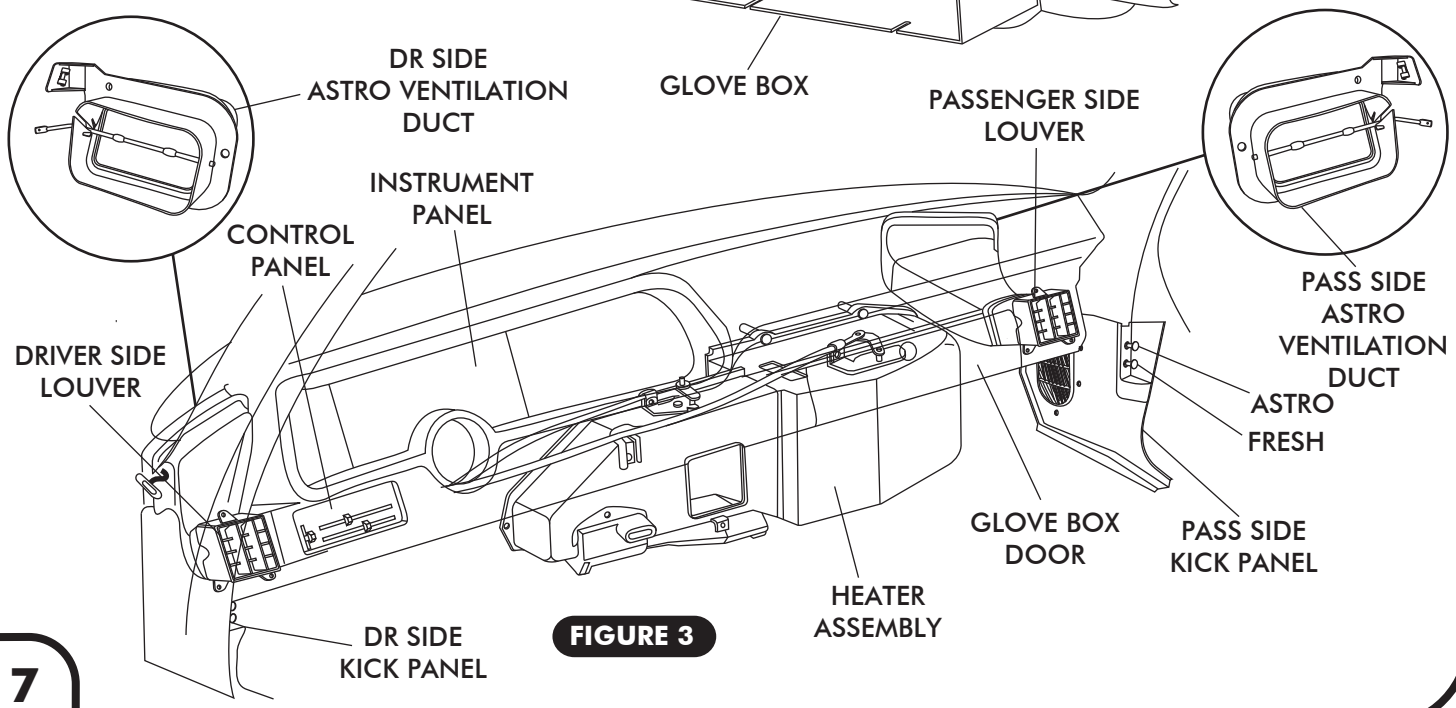

FIGURE 3

PASSENGER SIDE KICK PANEL MODIFICATION

- ☐ REMOVE KICK PANEL BY REMOVING THE (5) OEM SCREWS. DISCONNECT THE FRESH AIR DOOR FROM THE LEVER HOUSING. SEE FIGURE 4
- ☐ CUT KICK PANEL GRILLE USING TEMPLATE PROVIDED ON PAGE 24. SEE FIGURE 4a BELOW.
- ☐ ENLARGE OEM LEVER HOUSING HOLES TO 1/2". SEE FIGURE 4a
- ☐ INSTALL (2) 1/2" PLASTIC PLUGS IN OEM LEVER HOUSING HOLES. SEE FIGURE 4a BELOW.

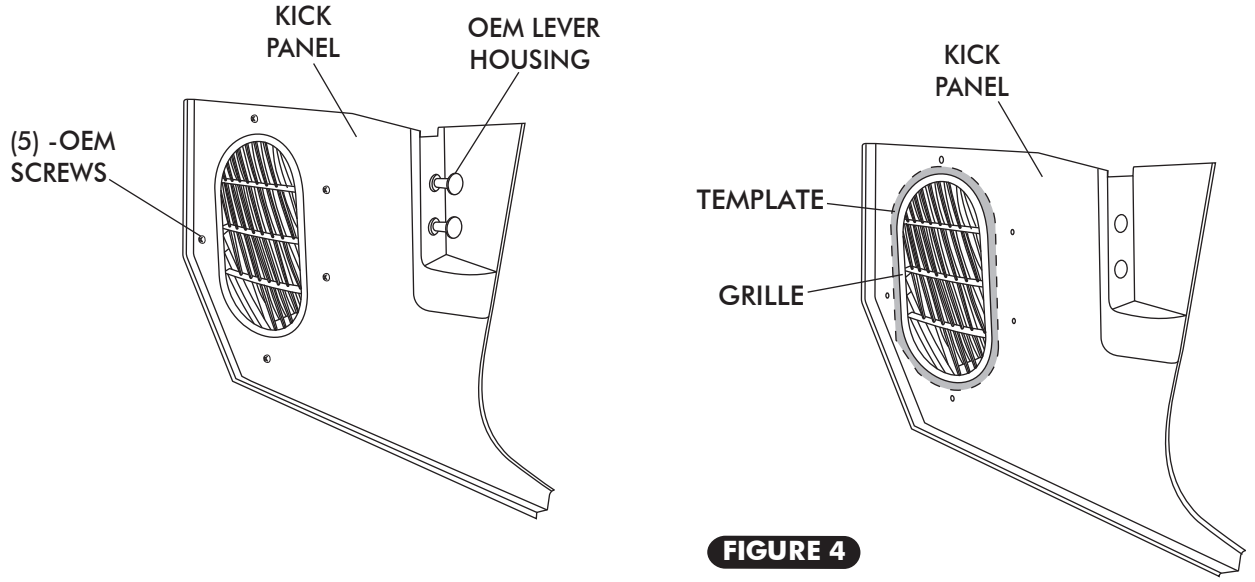

FIGURE 4

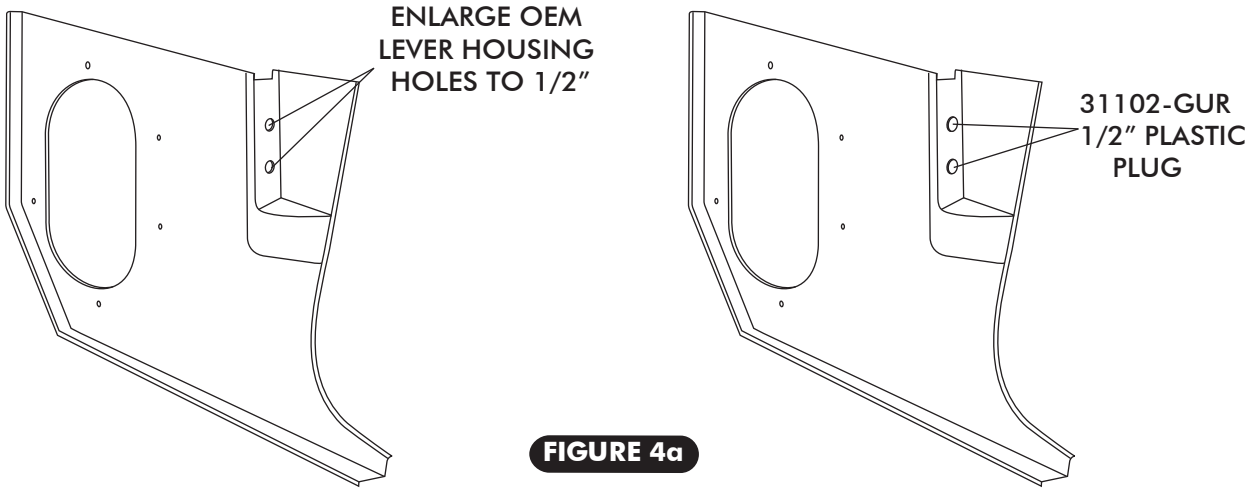

FIGURE 4a

DEFROST DUCT/FRESH AIR COVER INSTALLATION

- ☐ INSTALL THE DEFROST DUCTS UNDER DASH ON OEM DEFROST DUCT MOUNTING FLANGE AS SHOWN IN FIGURE 5 BELOW. SECURE USING 10/24 x 3/8" PAN HEAD SCREW AND 10/ 24 NUT w/ STARWASHER.
- ☐ APPLY A 1/4" BEAD OF SILICONE AROUND THE BACK SIDE OF THE DR/ PASS SIDE FRESH AIR CAPS AS SHOWN IN FIGURE 5a BELOW.
- ☐ INSTALL DR/ PASS SIDE FRESH AIR CAPS SECURE USING OEM SCREWS SEE FIGURE 5 BELOW.

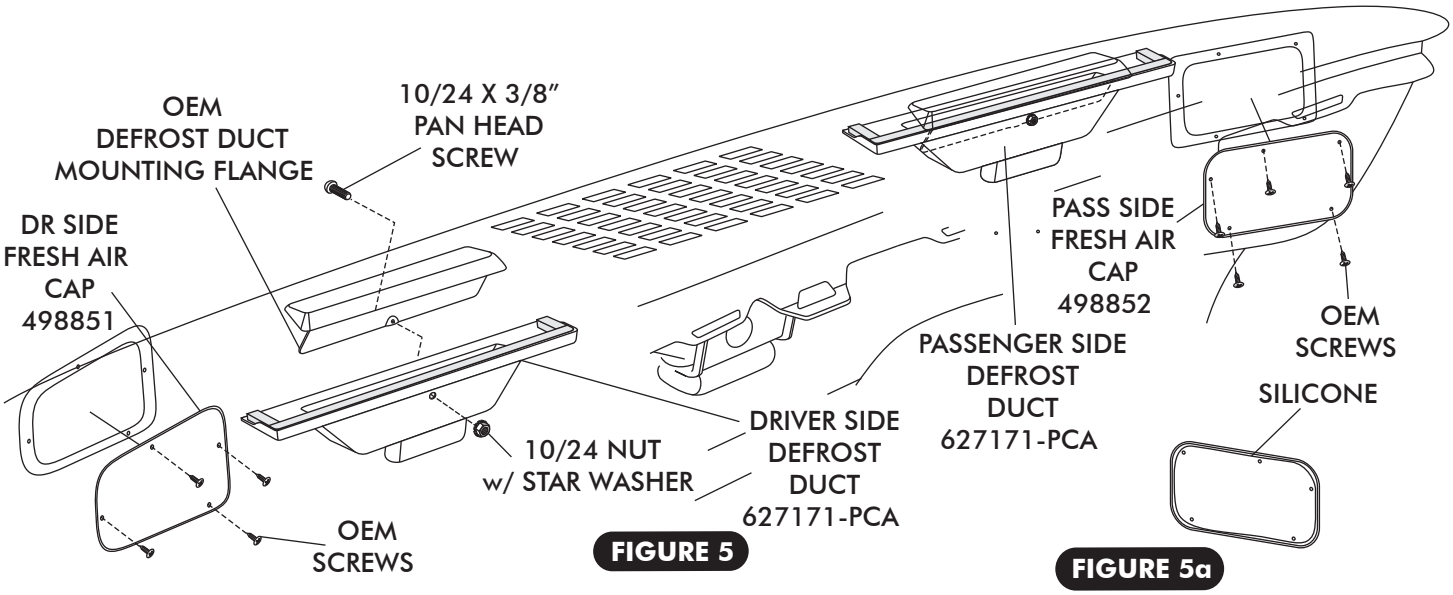

FIGURE 5

FIGURE 5a

HOSE ADAPTER INSTALLATION

- ☐ INSTALL (2) S-CLIPS ON HOSE ADAPTER AS SHOWN IN FIGURE 6 BELOW.
- ☐ INSTALL DRIVER & PASSENGER SIDE HOSE ADAPTERS ON OEM LOUVERS. SEE FIGURE 6 BELOW.

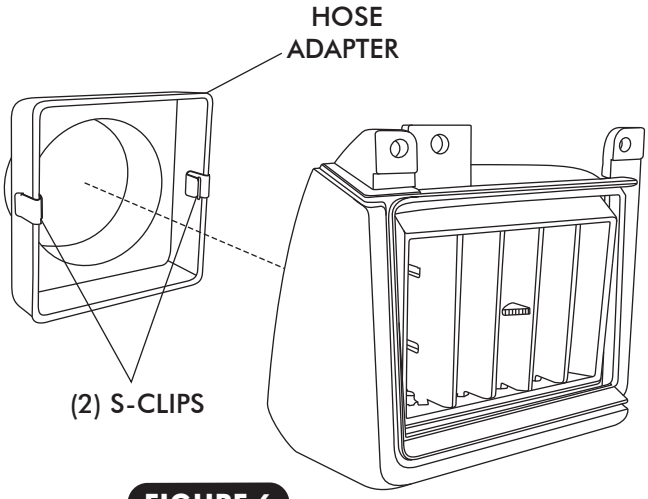

FIGURE 6

FRESH AIR COVER AND HEATER COVER BRACKET INSTALLATION

- ☐ INSTALL (4) GROMMETS IN FRESH AIR CAP. SEE FIGURE 7 BELOW
- ☐ APPLY A 1/4" BEAD OF SILICONE AROUND THE BACK SIDE OF THE FRESH AIR CAP AS SHOWN IN FIGURE 7.
- ☐ ATTACH FRESH AIR CAP TO FIREWALL USING A 1/4-20 x 1 1/2" BOLT AND WASHER, SEE FIGURE 7. (NOTE: FRESH AIR CAP INSTALLS ON ENGINE SIDE OF FIREWALL.)
- ☐ INSTALL 1 ¼" PLUG IN FIREWALL. SEE FIGURE 7.

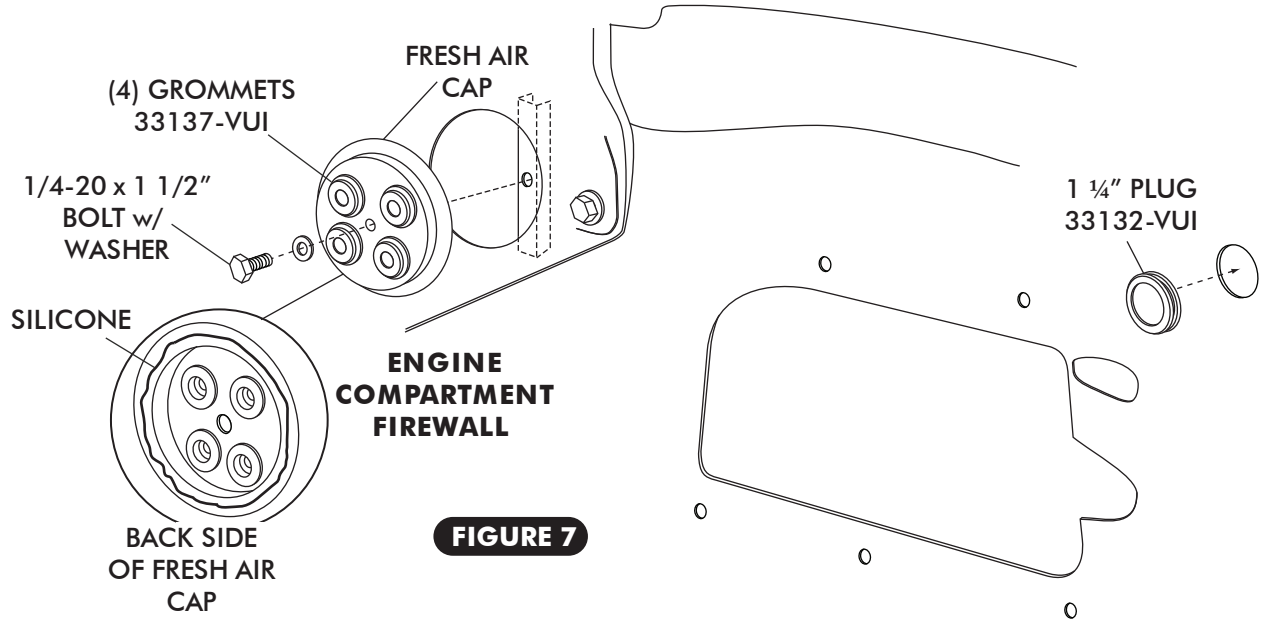

FIGURE 7

KICK PANEL FRESH AIR CAP INSTALLATION

- ☐ INSTALL (4) GROMMETS IN KICK PANEL FRESH AIR CAP, SEE FIGURE 8a BELOW.
- ☐ ROUTE A/C AND HEATER HOSE THROUGH FRESH AIR CAP AND KICK PANEL FRESH AIR CAP AS SHOWN IN FIGURE 8 AND 8b, BELOW.
- ☐ APPLY A 1/4" BEAD OF SILICONE AROUND THE BACK SIDE OF KICK PANEL FRESH AIR CAP AS SHOWN IN FIGURE 8a, BELOW.
- ☐ SECURE KICK PANEL FRESH AIR CAP USING OEM SCREWS, AS SHOWN IN FIGURE 8b BELOW.

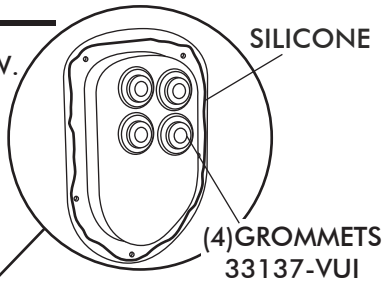

FIGURE 8a

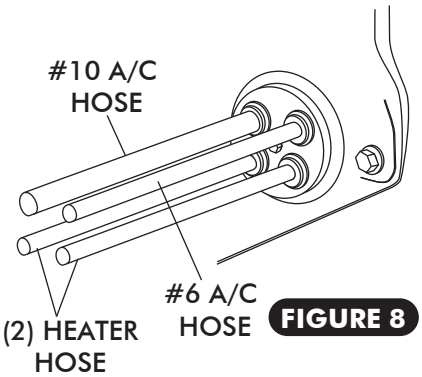

FIGURE 8

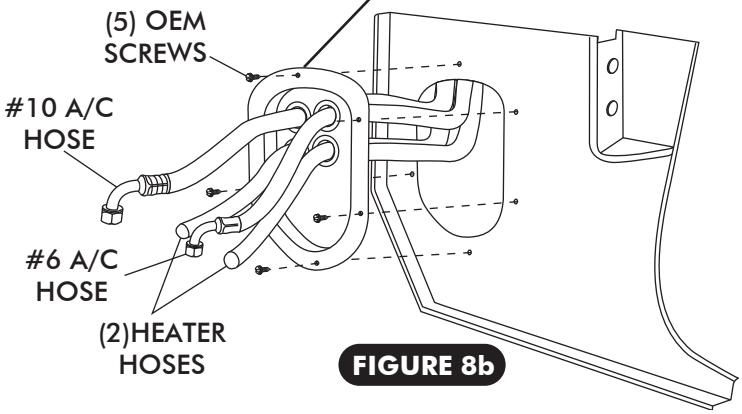

FIGURE 8b

FIREWALL COVER INSTALLATION

- ☐ ENLARGE (5) OEM FIREWALL HOLES TO 5/16". SEE FIGURE 9 BELOW.
- ☐ APPLY A 1/4" BEAD OF SILICONE AROUND THE BACK SIDE OF THE FIREWALL COVER AS SHOWN IN FIGURE 9.
- ☐ FROM INSIDE THE CAR, INSTALL FIREWALL COVER ON FIREWALL SEE FIGURE 9, BELOW. FROM THE ENGINE COMPARTMENT SECURE FIREWALL COVER TO FIREWALL USING (4) 1/4-20 x 1", HEX BOLTS, (5) FLAT WASHERS AND 1/4" NUT w/ STAR WASHER. SEE FIGURE 9.

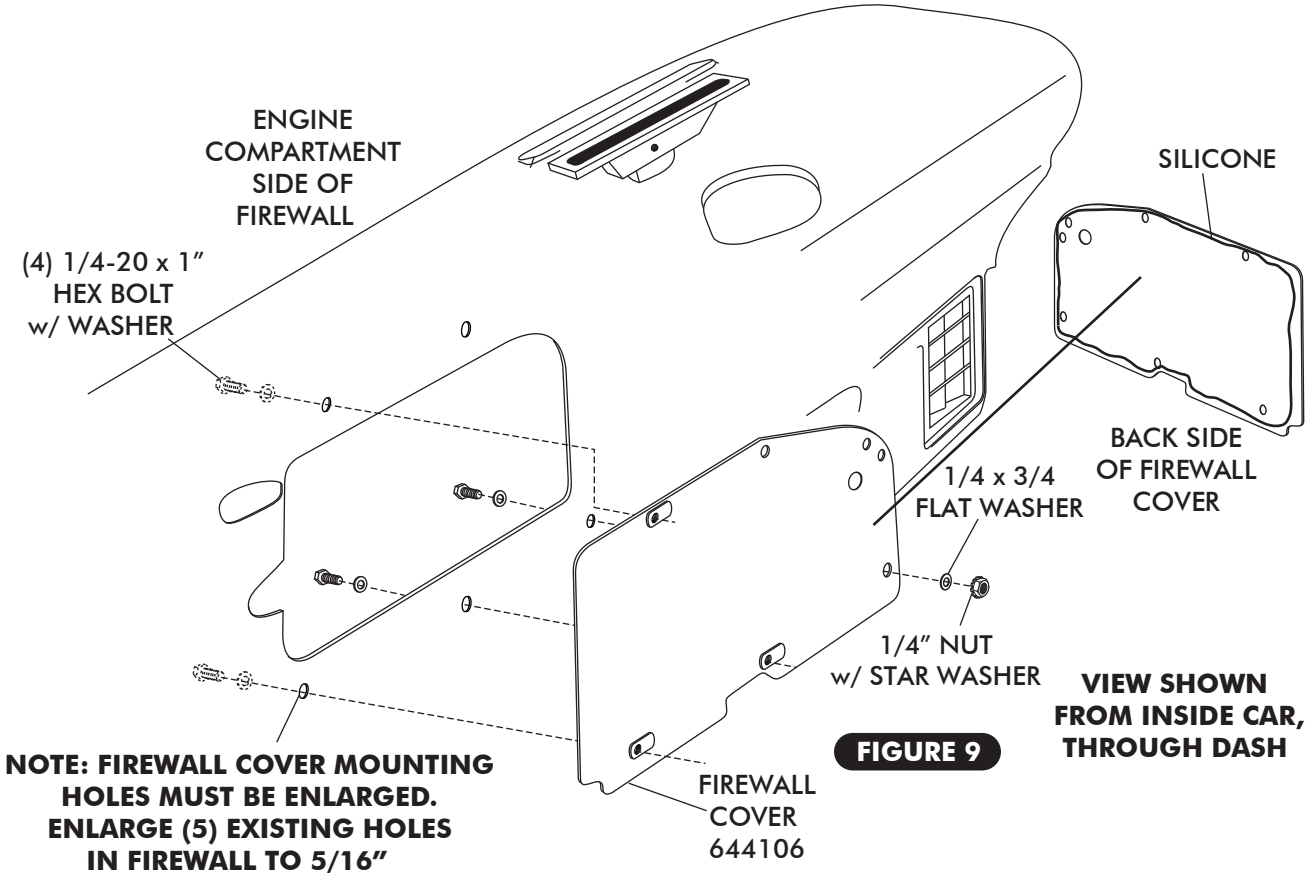

FIGURE 9

EVAPORATOR BRACKET AND AC & HEATER HOSE INSTALLATION

- ☐ ON A WORK BENCH, INSTALL EVAPORATOR REAR BRACKET AND AC & HEATER HOSE WITH PROPERLY LUBRICATED O-RINGS. (SEE FIGURE 11, PAGE 12, AND FIGURES 15, PAGE 15.)
- ☐ INSTALL FRONT MOUNTING BRACKET ON EVAPORATOR USING (2) 1/4-20 x 1/2" HEX BOLTS AND TIGHTEN AS SHOWN IN FIGURE 10 BELOW.

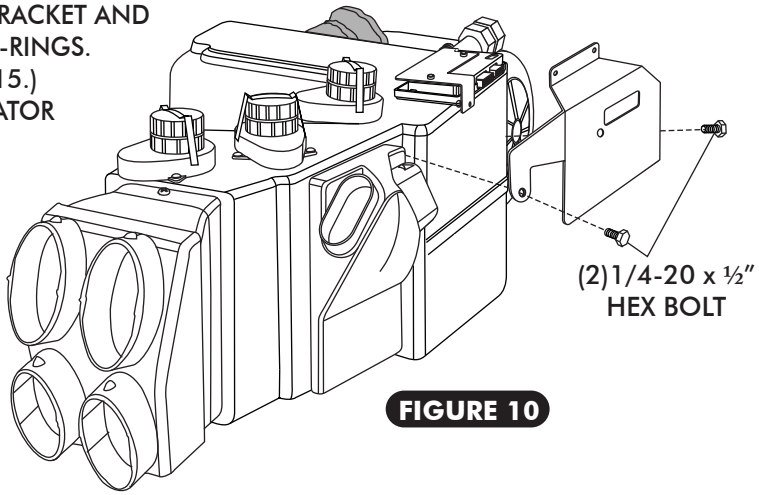

FIGURE 10

EVAPORATOR BRACKET AND HEATER FITTINGS INSTALLATION CONT.

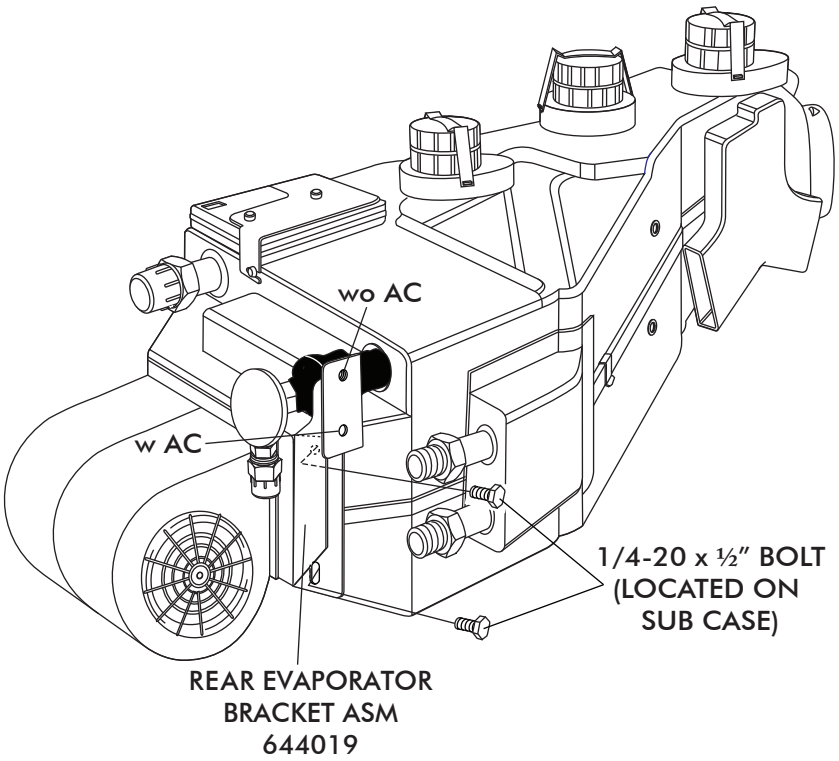

FIGURE 11

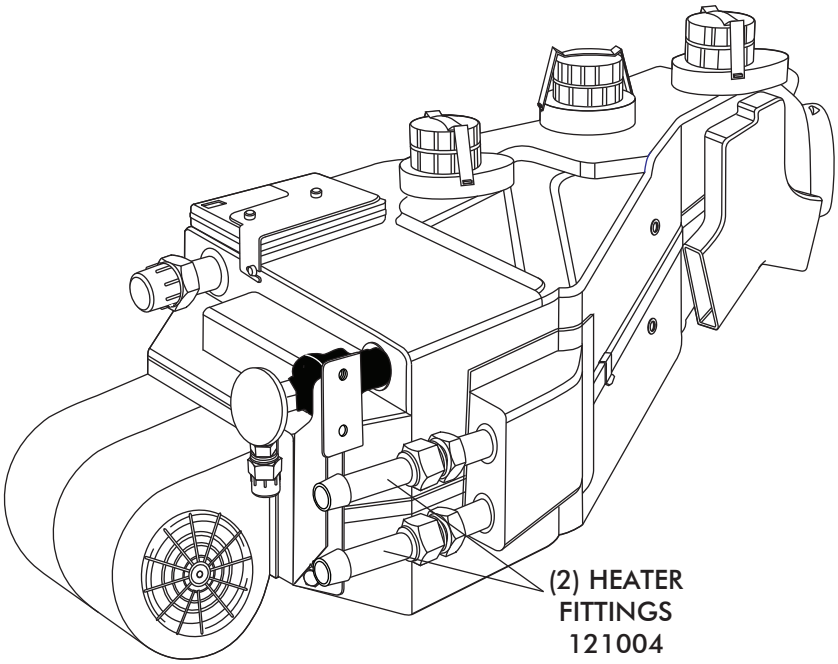

EVAPORATOR INSTALLATION

- ☐ LIFT EVAPORATOR UNIT UP UNDER THE DASHBOARD. SEE FIGURE 12. SECURE LOOSELY TO THE FIREWALL FROM THE ENGINE COMPARTMENT SIDE USING A 1/4-20 x 1" BOLT AND WASHER, SEE FIGURE 12 BELOW.
- ☐ USING (2) #14 x 3/4" SHEETMETAL SCREW SECURE THE FRONT EVAPORATOR MOUNTING BRACKET TO THE INNER COWL. SEE FIGURE 12.
- ☐ VERIFY THAT EVAPORATOR UNIT IS LEVEL AND SQUARE TO THE DASH, THEN TIGHTEN ALL MOUNTING BOLTS. **(NOTE: TIGHTEN THE BOLT ON FIREWALL FIRST, THEN THE FRONT MOUNTING BRACKET SCREWS.)**

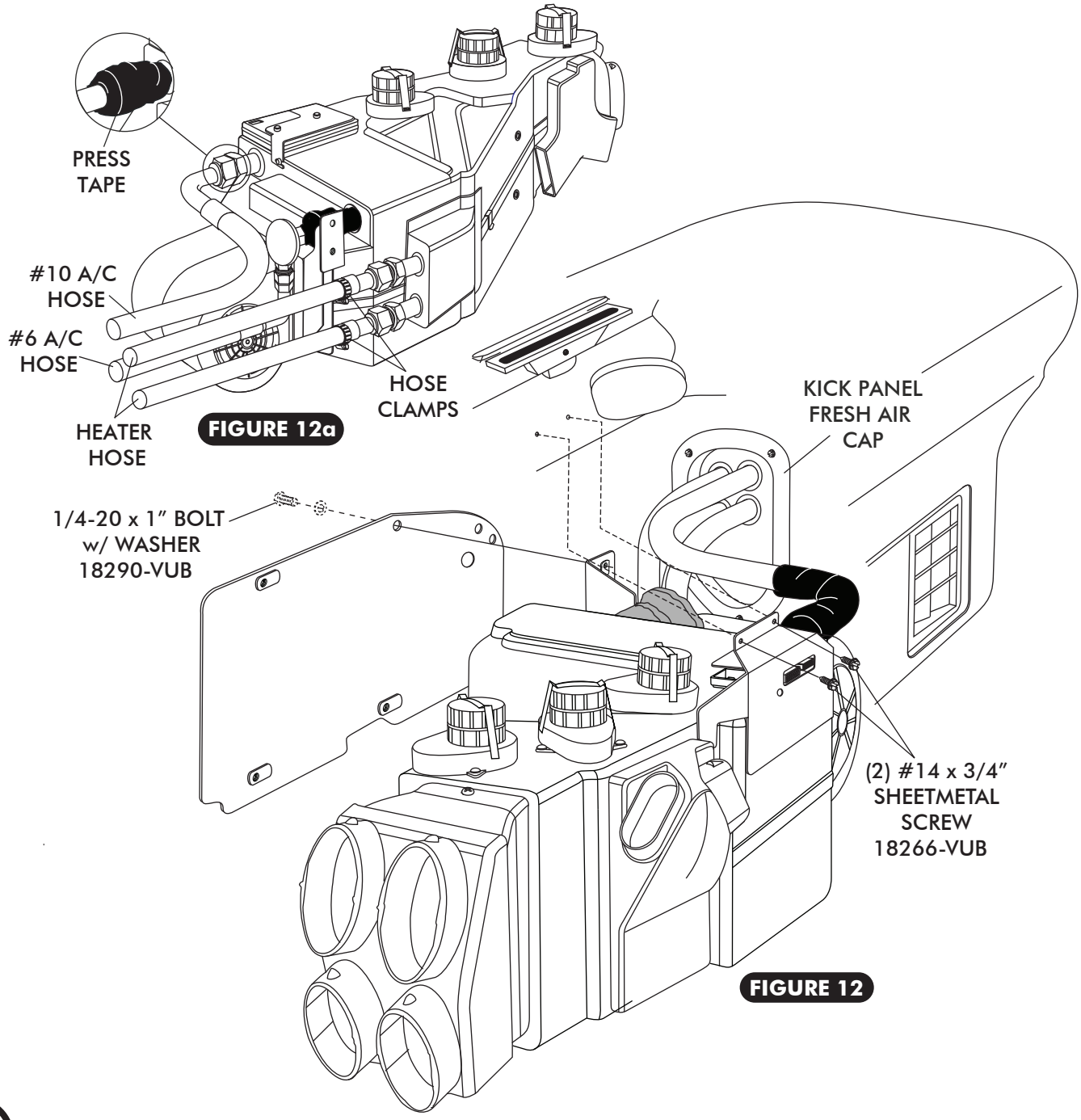

FIGURE 12a

FIGURE 12

CENTER LOUVER INSTALLATION

- ☐ REMOVE OEM CENTER LOUVER BLOCK-OFF PLATE.
- ☐ INSTALL (2) OEM CENTER LOUVERS.
- ☐ INSTALL (2) S-CLIPS ON CENTER LOUVER HOSE ADAPTER. SEE FIGURE 13 BELOW.
- ☐ INSTALL CENTER LOUVER HOSE ADAPTER ON CENTER LOUVER AS SHOWN BELOW.

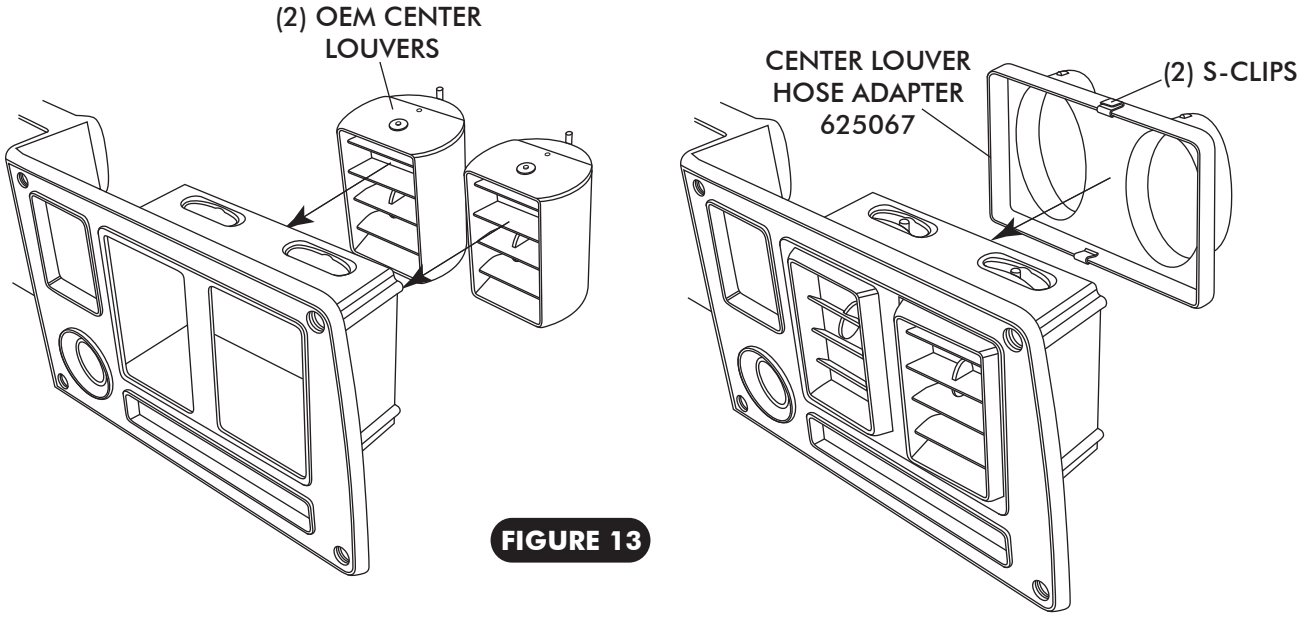

FIGURE 13

DRAIN HOSE INSTALLATION

- ☐ LOCATE EVAPORATOR DRAIN ON BOTTOM OF EVAPORATOR CASE
- ☐ IN-LINE WITH THE DRAIN, LIGHTLY MAKE A MARK ON THE FIREWALL. MEASURE ONE INCH DOWN AND DRILL A 5/8" HOLE THROUGH THE FIREWALL. SEE FIGURE 14.
- ☐ INSTALL DRAIN HOSE TO BOTTOM OF EVAPORATOR UNIT AND ROUTE THROUGH FIREWALL. SEE FIGURE 14.

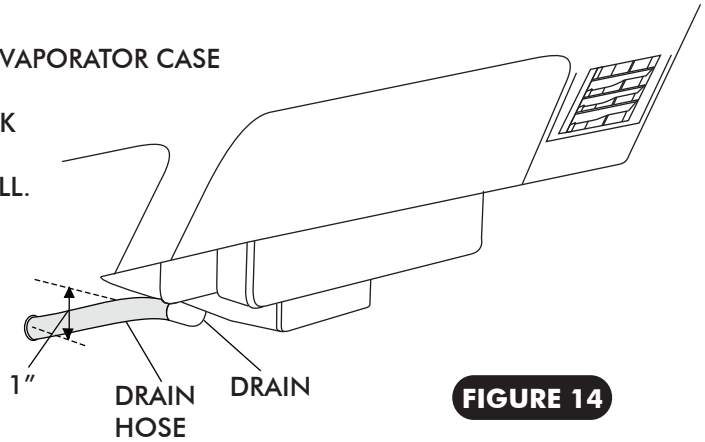

FIGURE 14

LUBRICATING O-RINGS

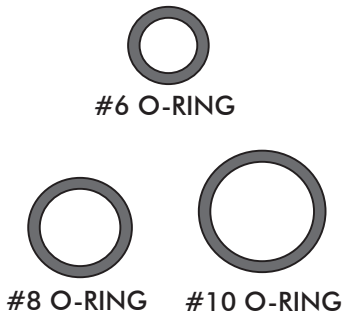

FIGURE 15

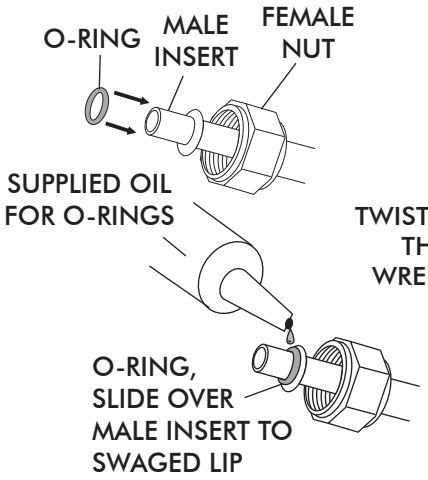

FOR A PROPER SEAL OF FITTINGS: INSTALL SUPPLIED O-RINGS AS SHOWN AND LUBRICATE WITH SUPPLIED OIL.

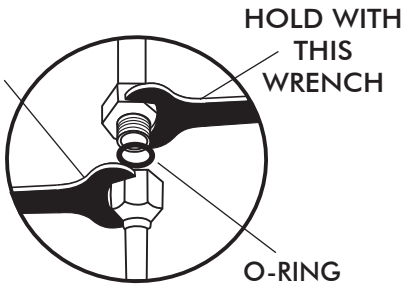

A/C HOSE INSTALLATION

STANDARD HOSE KIT

☐ LOCATE THE #8 COMPRESSOR A/C HOSE. LUBRICATE (2) #8 O-RINGS (SEE FIGURE 15, ABOVE) AND CONNECT THE 90° FEMALE FITTING w/ 134a SERVICE PORT TO THE #8 DISCHARGE PORT ON THE COMPRESSOR. ROUTE THE 45° FEMALE FITTING TO THE #8 CONDENSER HARDLINE COMING THROUGH CORE SUPPORT. SEE FIGURE 16 PAGE 16. TIGHTEN EACH FITTING CONNECTION AS SHOWN IN FIGURE 15 ABOVE.

☐ LOCATE THE #10 COMPRESSOR A/C HOSE. LUBRICATE (2) #10 O-RINGS (SEE FIGURE 15, ABOVE) AND CONNECT THE #10 135° FEMALE FITTING w/134a SERVICE PORT TO THE #10 SUCTION PORT ON THE COMPRESSOR. ROUTE THE 90° FEMALE FITTING TO THE #10 EVAPORATOR. SEE FIGURE 12a, PAGE 13 AND FIGURE 16 PAGE 16. TIGHTEN EACH FITTING CONNECTION AS SHOWN IN 15 ABOVE.

☐ LOCATE THE #6 EVAPORATOR A/C HOSE. LUBRICATE (2) #6 O-RINGS (SEE FIGURE 15, ABOVE) AND CONNECT THE 90° FEMALE FITTING TO THE #6 HARDLINE COMING THROUGH THE CORE SUPPORT FROM DRIER. ROUTE THE 90° FEMALE FITTING TO THE #6 EVAPORATOR. SEE FIGURE 12a, PAGE 13 AND FIGURE 16 PAGE 16. TIGHTEN EACH FITTING CONNECTION AS SHOWN IN FIGURE 15, ABOVE.

MODIFIED A/C HOSE KIT

☐ REFER TO SEPARATE INSTRUCTIONS INCLUDED WITH MODIFIED HOSE KIT.

HEATER HOSE & HEATER CONTROL VALVE INSTALLATION

- ☐ ROUTE A PIECE OF HEATER HOSE FROM THE WATER PUMP TO THE TOP HEATER FITTING OF HEATER CORE AS SHOWN IN FIGURE 12a PAGE 13 AND FIGURE 16 BELOW. SECURE USING HOSE CLAMPS.
- ☐ ROUTE A PIECE OF HEATER HOSE FROM THE INTAKE TO THE BOTTOM HEATER FITTING OF HEATER CORE AS SHOWN IN FIGURE 12a PAGE 13 AND FIGURE 16 BELOW. NOTE: INSTALL HEATER CONTROL VALVE IN-LINE WITH INTAKE MANIFOLD (PRESSURE SIDE) HEATER HOSE, SECURE USING HOSE CLAMPS AS SHOWN IN FIGURE 16, BELOW. **NOTE PROPER FLOW DIRECTION**.)

AC & HEATER HOSE ROUTING

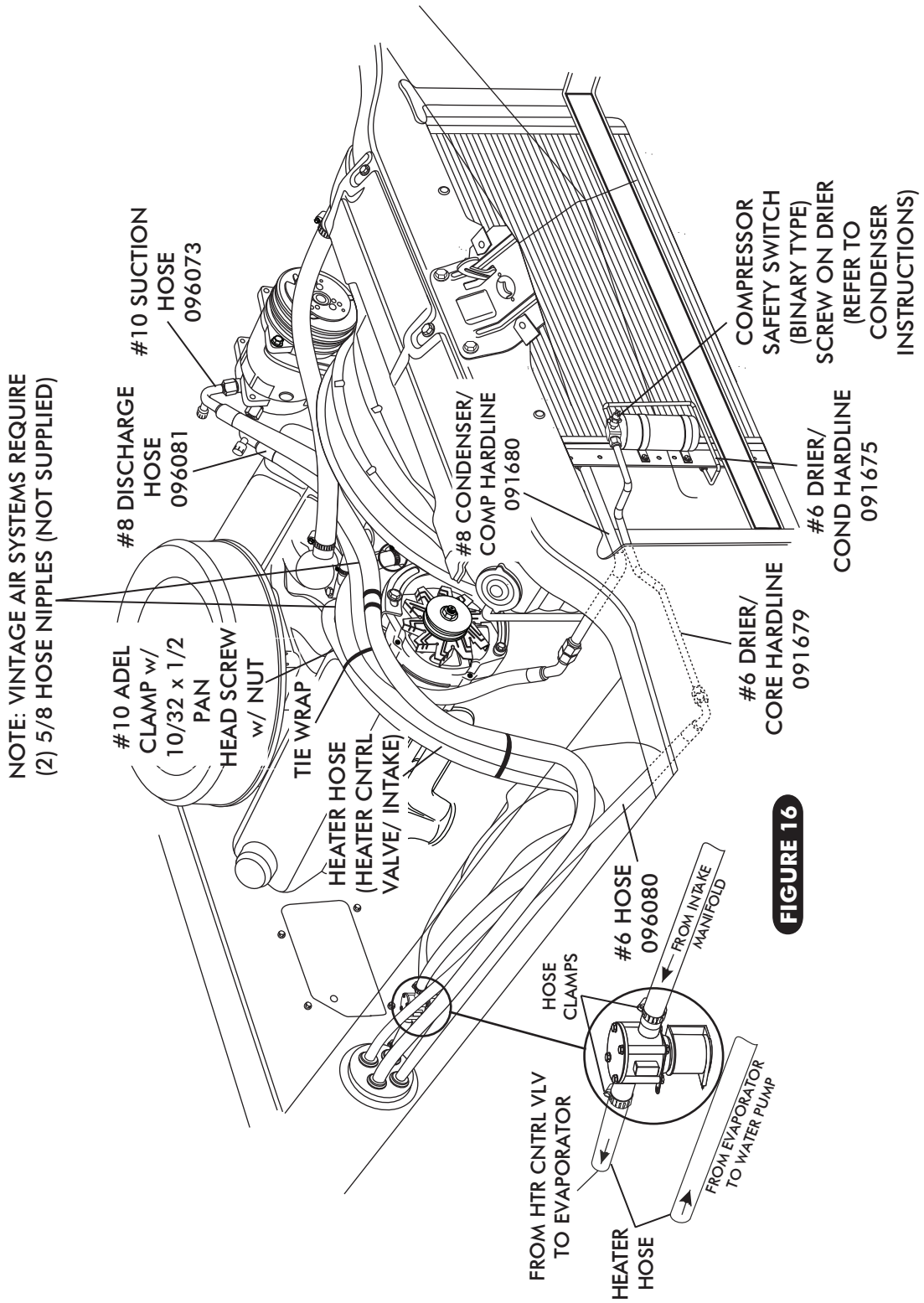

FIGURE 16

FINAL STEPS

- ☐ INSTALL DUCT HOSES AS SHOWN IN FIGURE 19, PAGE 18.
- ☐ INSTALL 3/8" ID GROMMET. SEE FIGURE 17.
- ☐ ROUTE A/C WIRES THROUGH 3/8 ID GROMMET AS SHOWN ON FIGURE 17 (12 VOLT/ GROUND/ BINARY SWITCH/ HEATER VALVE).
- ☐ INSTALL CONTROL PANEL ASM.
- ☐ PLUG THE WIRING HARNESS IN THE ECU MODULE ON SUB CASE AS SHOWN IN FIGURE 19, PAGE 18 (WIRE ACCORDING TO WIRING DIAGRAM ON PAGE 19 & 20.)
- ☐ INSTALL GLOVE BOX (SEE FIGURE 18)
- ☐ REINSTALL ALL PREVIOUSLY REMOVED ITEMS (BATTERY TRAY & BATTERY).
- ☐ FILL RADIATOR WITH AT LEAST A 50/50 MIXTURE OF APPROVED ANTIFREEZE AND DISTILLED WATER. IT IS THE OWNERS RESPONSIBILTY TO KEEP THE FREEZE PROTECTION AT THE PROPER LEVEL FOR THE CLIMATE IN WHICH THE VEHICLE IS OPERATED. FAILURE TO FOLLOW ANTIFREEZE RECOMMENDATIONS WILL CAUSE HEATER CORE TO CORRODE PREMATURELY AND POSSIBLY BURST IN AC MODE AND/ OR FREEZING WEATHER, VOIDING YOUR WARRANTY.
- ☐ DOUBLE CHECK ALL FITTING, BRACKETS AND BELTS FOR TIGHTNESS.
- ☐ VINTAGE AIR RECOMMENDS THAT ALL AC SYSTEMS BE SERVICED BY A CERTIFIED AUTOMOTIVE AIR CONDITIONING TECHNICIAN.
- ☐ EVACUATE THE SYSTEM FOR A MINIMUM OF 45 MINUTES PRIOR RO CHARGING AND LEAK CHECK PRIOR TO SERVICING.
- ☐ CHARGE THE SYSTEM TO THE CAPACITIES STATED ON THE INFORMATION PAGE (PAGE 4) OF THIS INSTRUCTION MANUAL.
- ☐ SEE OPERATION OF CONTROLS PROCEDURES PAGE 21.

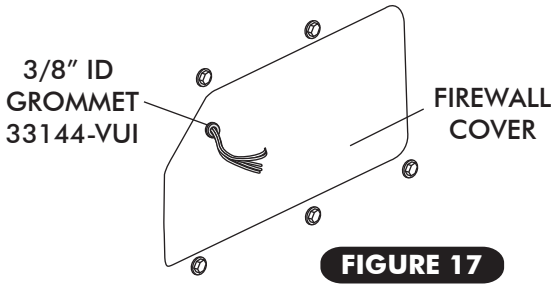

FIGURE 17

GLOVE BOX INSTALLATION

- ☐ INSTALL GLOVE BOX PROVIDED, SECURE WITH OEM SCREWS THROUGH OEM HOLES. SEE FIGURE 18.
- ☐ INSTALL GLOVE BOX DOOR.

NOTE: IF EQUIPPED WITH THE GLOVE BOX LIGHT AS SHOWN BELOW IN FIGURE 18a. MODIFY PLASTIC GLOVE BOX USING TEMPLATE PROVIDED ON PAGE 25.

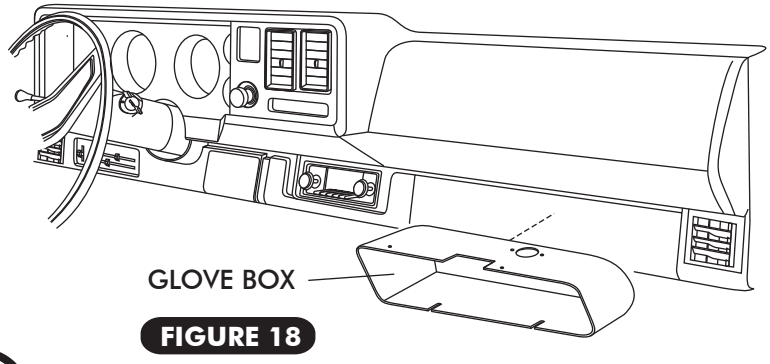

FIGURE 18

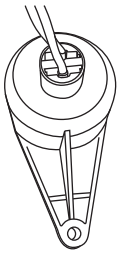

FIGURE 18a

CONTROL PANEL & DUCT HOSE ROUTING

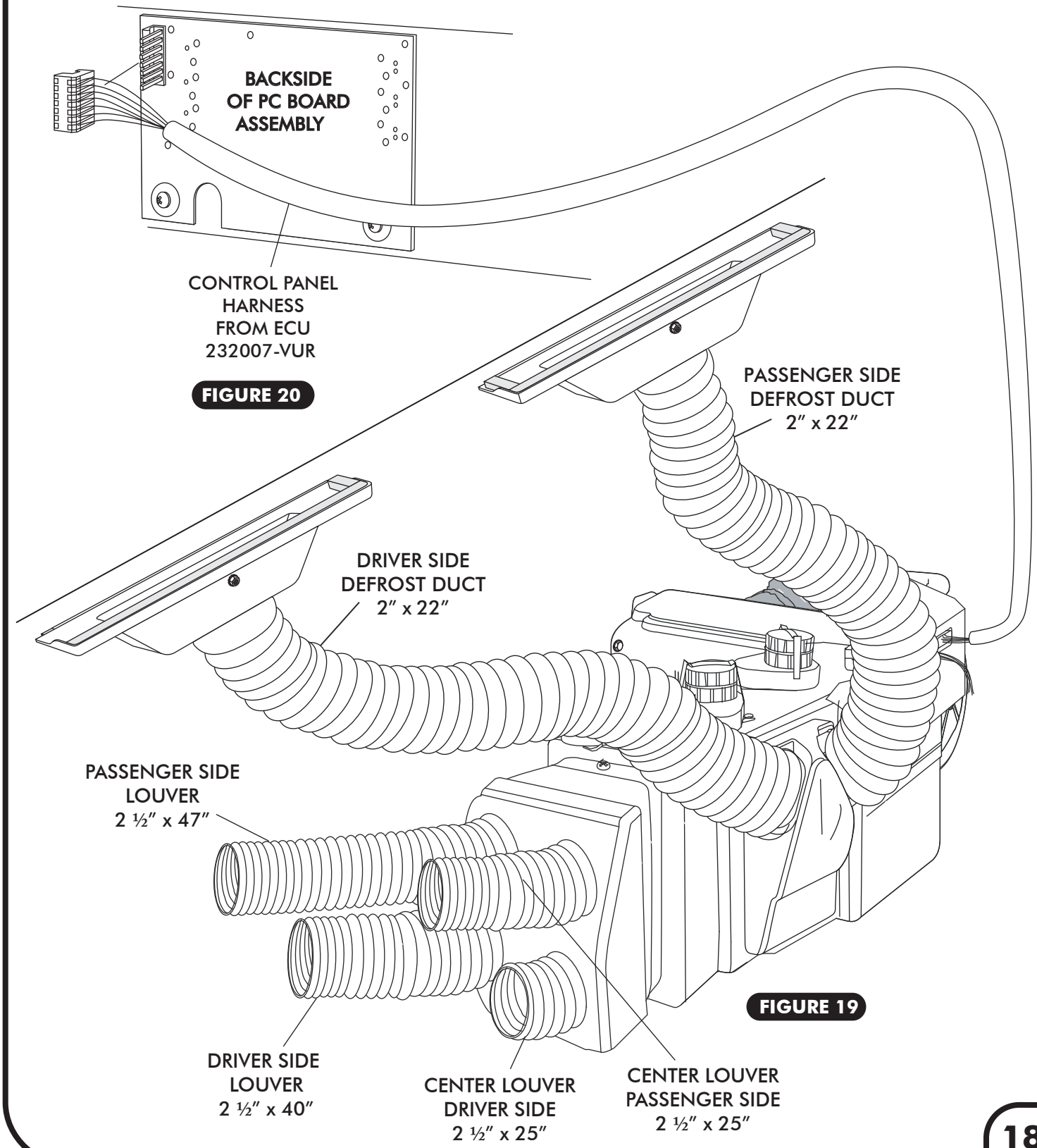

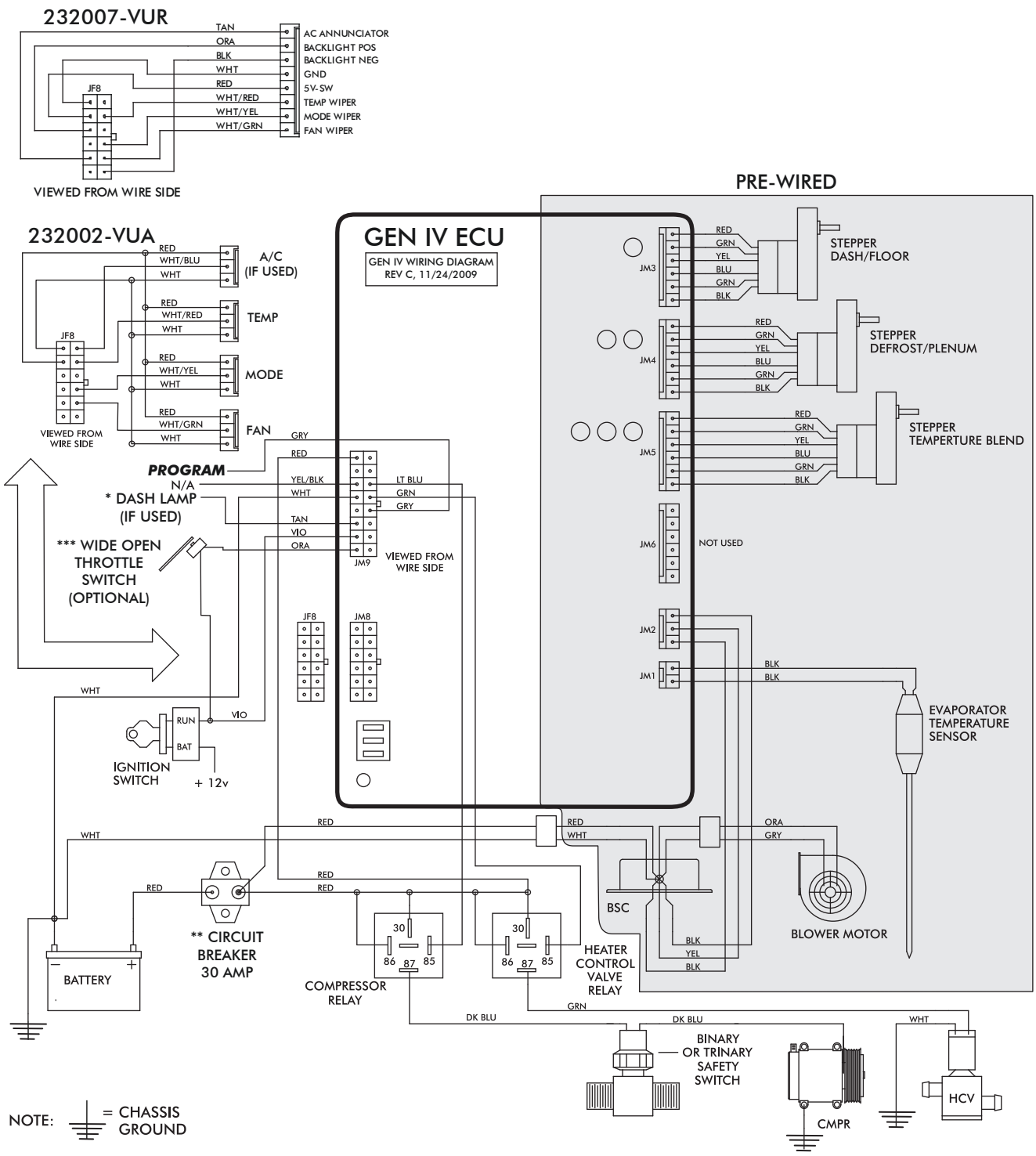

- **Dash Lamp Is Used Only With Type 232007-VUR Harness.**
- **Warning: Always Mount Circuit Breaker Under the Hood in the Engine Compartment and As Close to the Battery As Possible.**
- **Wide Open Throttle Switch Contacts Close Only at Full Throttle, Which Disables A/C Compressor.**

Gen IV Wiring Connection Instruction

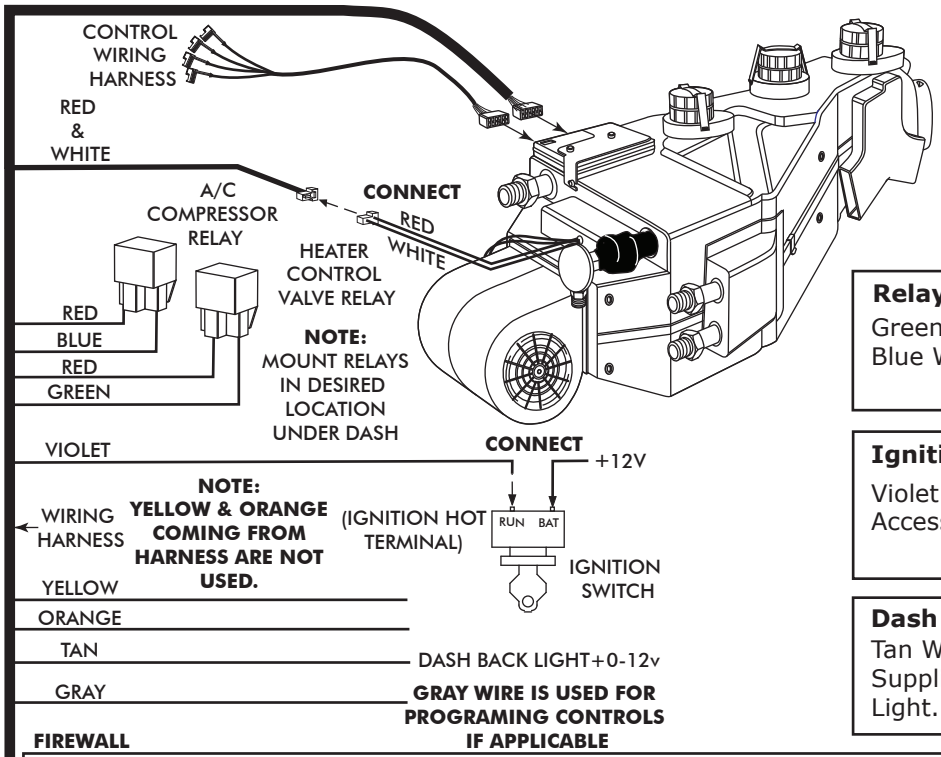

Relay:
Green Wire Is Heater Control Valve. Blue Wire Is A/C Compressor.

Ignition Switch:
Violet 12V Ign Switch Source (Key On Accessory) Position Must Be Switched.

Dash Light:
Tan Wire Used Only With Vintage Air Supplied Control Panel With LED Back Light.

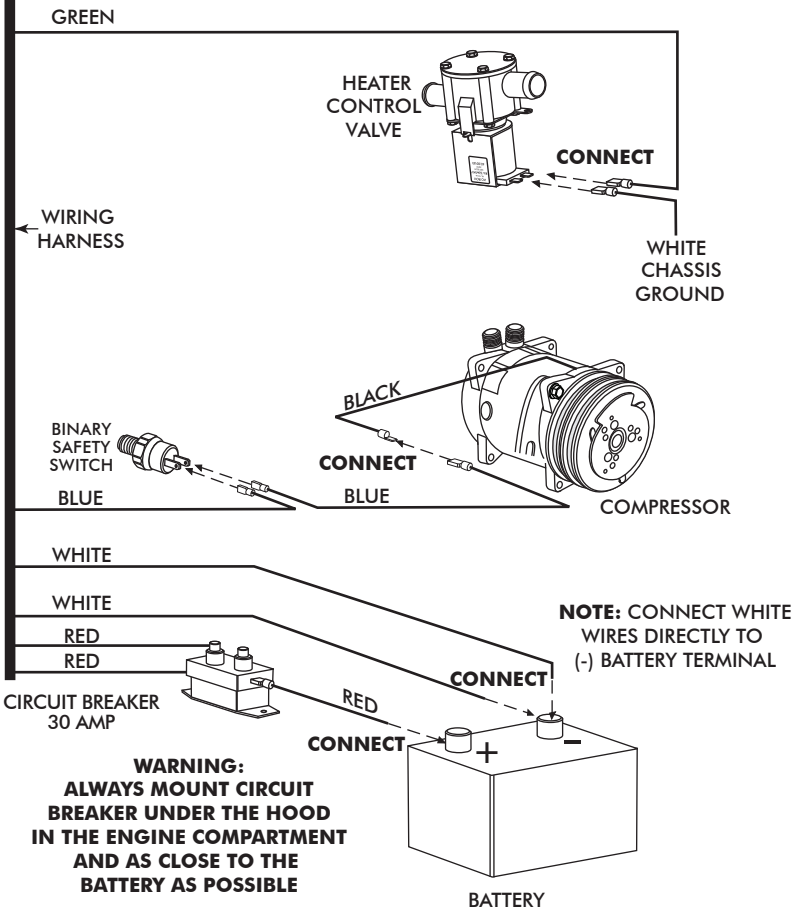

Heater Control Valve:
Install Solenoid Pointing Down. Normal To Get Very Hot During Operation. White Ground Wire (Not Part of Harness) Supplied in Kit. Normally Open Valve Must Be Connected for Proper System Operation.

Binary/Trinary & Compressor:
Binary: Connect As Shown (Typical Compressor Wiring). Be Sure Compressor Body Is Grounded.

Trinary Switch: Connect According to Trinary Switch Wiring Diagram.

Circuit Breaker/Battery:
White **Must** Run To (-) Battery. Red May Run to (+) Battery or Starter. Mount Circuit Breaker As Close to Battery As Possible.

OPERATION OF CONTROLS

NOTE: WHEN BATTERY POWER IS FIRST CONNECTED TO THE ECU, THE COMPUTER GOES THROUGH AN INITIALIZATION SEQUENCE. THIS INITIALIZATION MAY TAKE UP TO 30 SECONDS. A LOW BATTERY OR DISCONNECTING THE BATTERY MAY ALSO TRIGGER A RE-INITIALIZATION. DURING START UP, A LOW BATTERY MAY DROP BELOW 7 VOLTS, TRIGGERING RE-INITIALIZATION.

A/C MODE

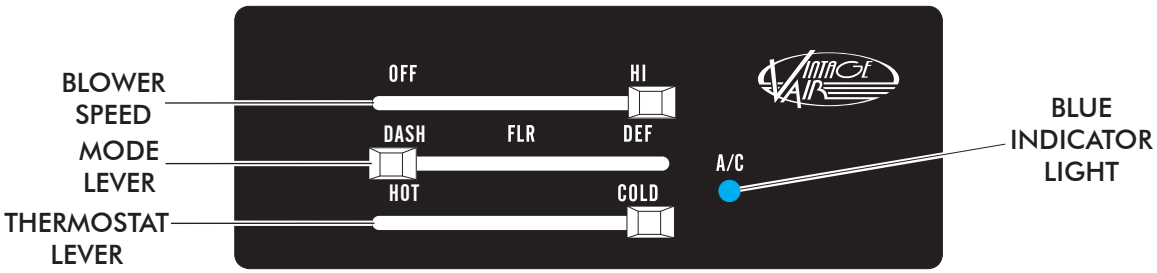

BLOWER SPEED
THIS LEVER CONTROLS THE BLOWER SPEED, FROM OFF TO HI

A/C THERMOSTAT LEVER
IN A/C MODE SLIDE THE THERMOSTAT LEVER ALL THE WAY RIGHT TO THE COLD POISTION, FOR MAXIMUM COOLING. BLUE AC INDICATOR LIGHT COME ON ONLY WHEN AC COMPRESSOR IS ENGAGED (SLIDE LEVER LEFT OR RIGHT TO ADJUSTDESIRED TEMPERATURE)

MODE LEVER
SLIDE THE LEVER TO THE DASH POSITION

HEAT MODE

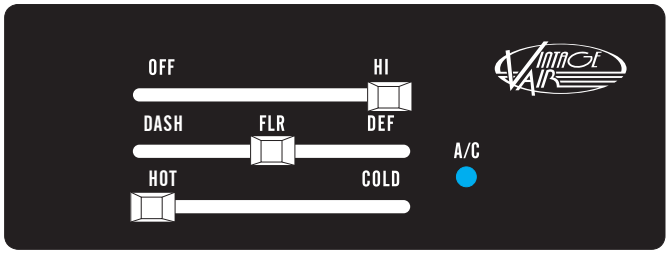

A/C THERMOSTAT LEVER
IN HEAT MODE SLIDE THE THERMOSTAT LEVER ALL THE WAY TO THE LEFT TO THE HOT POISTION, FOR MAXIMUM HEATING. (SLIDE LEVER LEFT OR RIGHT TO ADJUST DESIRED TEMPERATURE)

MODE LEVER
SLIDE THE LEVER TO THE FLR POSITION (SLIDE THE LEVER TO THE LEFT OR RIGHT, TO ADJUST DESIRED DASH/ FLR/ DEF LOCATION

DEFROST MODE

A/C THERMOSTAT LEVER
IN DEF MODE SLIDE THE THERMOSTAT LEVER ALL THE WAY TO THE LEFT TO THE HOT POISTION, FOR MAXIMUM HEATING. (SLIDE LEVER LEFT OR RIGHT TO ADJUST DESIRED TEMPERATURE)

MODE LEVER
SLIDE THE LEVER TO THE DEF POSITION

Troubleshooting Guide

Symptom	Condition	Checks	Actions	Notes
1a. Blower stays on high speed when ignition is on.	No other functions work.	Check for damaged pins or wires in control head plug.	Verify that all pins are inserted into plug. Ensure that no pins are bent or damaged in ECU.	
		Check for damaged ground wire (white) in control head harness.	Verify continuity to chassis ground with white control head wire at various points.	Loss of ground on this wire renders control head inoperable.
	All other functions work.	Check for damaged blower switch or potentiometer and associated wiring.		See blower switch check procedure.
1b. Blower stays on high speed when ignition is on or off.		Unplug 3-wire BSC control connector from ECU. If blower shuts off, ECU is either improperly wired or damaged.	Be sure the small, 20 GA white ground wire is connected to the battery ground post. If it is, replace the ECU.	
		Unplug 3-wire BSC control connector from ECU. If blower stays running, BSC is either improperly wired or damaged.	Check to ensure that no BSC wiring is damaged or shorted to vehicle ground. The BSC operates the blower by ground side pulse width modulation switching. The positive wire to the blower will always be hot. If the "ground" side of the blower is shorted to chassis ground, the blower will run on HI.	
			Replace BSC (This will require removal of evaporator from vehicle).	No other part replacements should be necessary.
2. Compressor will not turn on (All other functions work).	System is not charged.	System must be charged for compressor to engage.	Charge system or bypass pressure switch.	**Danger: Never bypass safety switch with engine running. Serious injury can result.**
	System is charged.	Check for faulty A/C potentiometer or associated wiring (Not applicable to 3-pot controls).	Check continuity to ground on white control head wire. Check for 5V on red control head wire.	To check for proper pot function, check voltage at white/blue wire. Voltage should be between 0V and 5V, and will vary with pot lever position.
		Check for disconnected or faulty thermistor.	Check 2-pin connector at ECU housing.	Disconnected or faulty thermistor will cause compressor to be disabled.
3. Compressor will not turn off (All other functions work).		Check for faulty A/C potentiometer or associated wiring.	Repair or replace pot/control wiring.	Red wire at A/C pot should have approximately 5V with ignition on. White wire will have continuity to chassis ground. White/Blue wire should vary between 0V and 5V when lever is moved up or down.
		Check for faulty A/C relay.	Replace relay.	

Troubleshooting Guide (Cont.)

Symptom	Condition	Checks	Actions	Notes
4. System will not turn on, or runs intermittently.	Works when engine is not running; shuts off when engine is started (Typically early Gen IV, but possible on all versions).	Noise interference from either ignition or alternator.	Install capacitors on ignition coil and alternator. Ensure good ground at all points. Relocate coil and associated wiring away from ECU and ECU wiring. Check for burned or loose plug wires.	Ignition noise (radiated or conducted) will cause the system to shut down due to high voltage spikes. If this is suspected, check with a quality oscilloscope. Spikes greater than 16V will shut down the ECU. Install a radio capacitor at the positive post of the ignition coil (See radio capacitor installation bulletin). A faulty alternator or worn out battery can also result in this condition.
	Will not turn on under any conditions.	Verify connections on power lead, ignition lead, and both white ground wires.	Check for positive power at heater valve green wire and blower red wire. Check for ground on control head white wire.	
		Verify battery voltage is greater than 10 volts and less than 16.	Verify proper meter function by checking the condition of a known good battery.	
5. Loss of mode door function.	No mode change at all.	Check for damaged mode switch or potentiometer and associated wiring.		Typically caused by evaporator housing installed in a bind in the vehicle. Be sure all mounting locations line up and don't have to be forced into position.
	Partial function of mode doors.	Check for obstructed or binding mode doors.		
		Check for damaged stepper motor or wiring.		
6. Blower turns on and off rapidly.	Battery voltage is at least 12V.	Check for at least 12V at circuit breaker.	Ensure all system grounds and power connections are clean and tight.	System shuts off blower at 10V. Poor connections or weak battery can cause shutdown at up to 11V.
	Battery voltage is less than 12V.	Check for faulty battery or alternator.	Charge battery.	
7. Erratic functions of blower, mode, temp, etc.		Check for damaged switch or pot and associated wiring.	Repair or replace.	
8. When ignition is turned on, blower momentarily comes on, then shuts off. This occurs with the blower switch in the OFF position.		This is an indicator that the system has been reset. Be sure the red power wire is on the battery post, and not on a switched source. Also, if the system is pulled below 7V for even a split second, the system will reset.	Run red power wire directly to battery.	

KICK PANEL MODIFICATION TEMPLATE

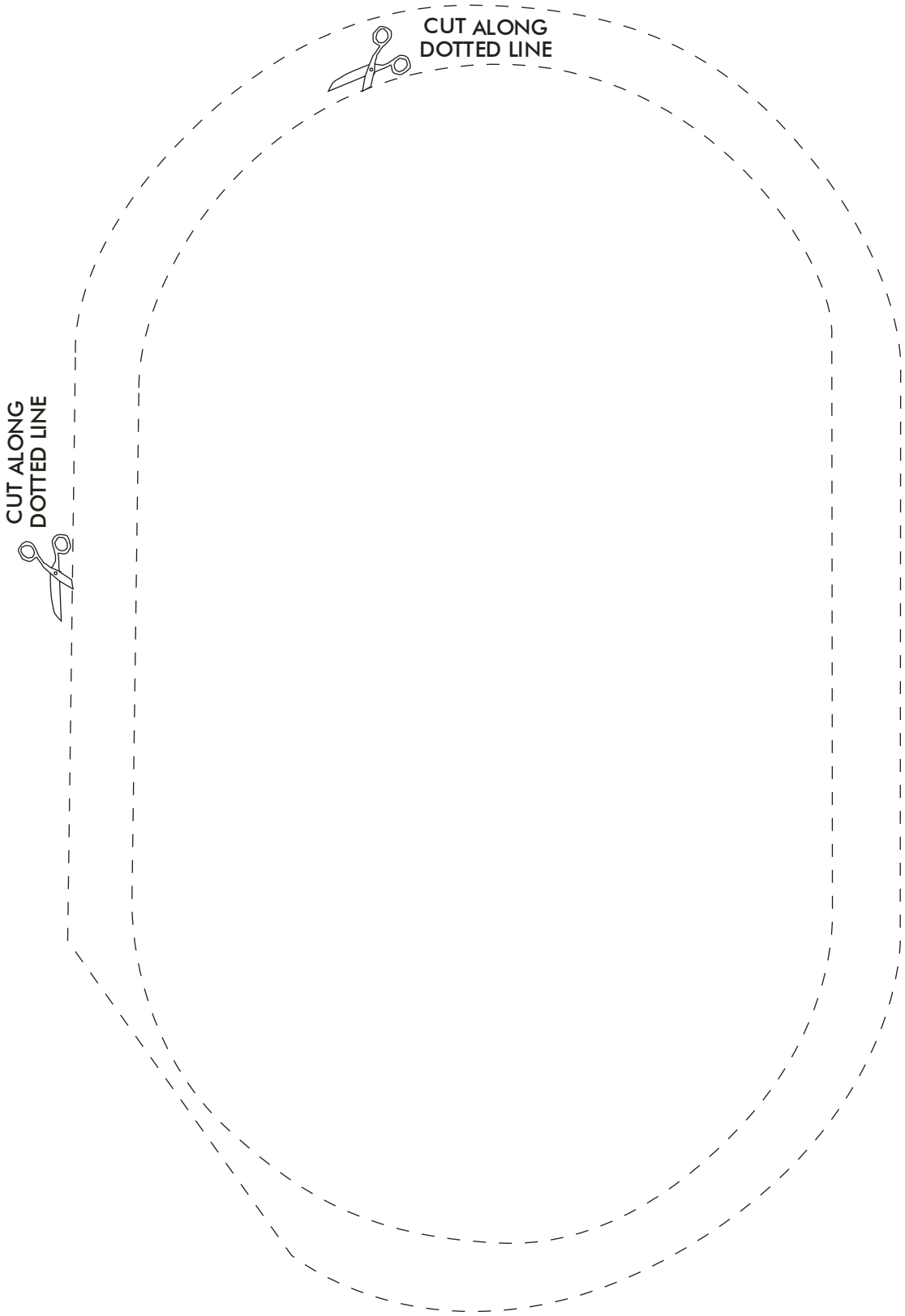

GLOVE BOX LIGHT TEMPLATE

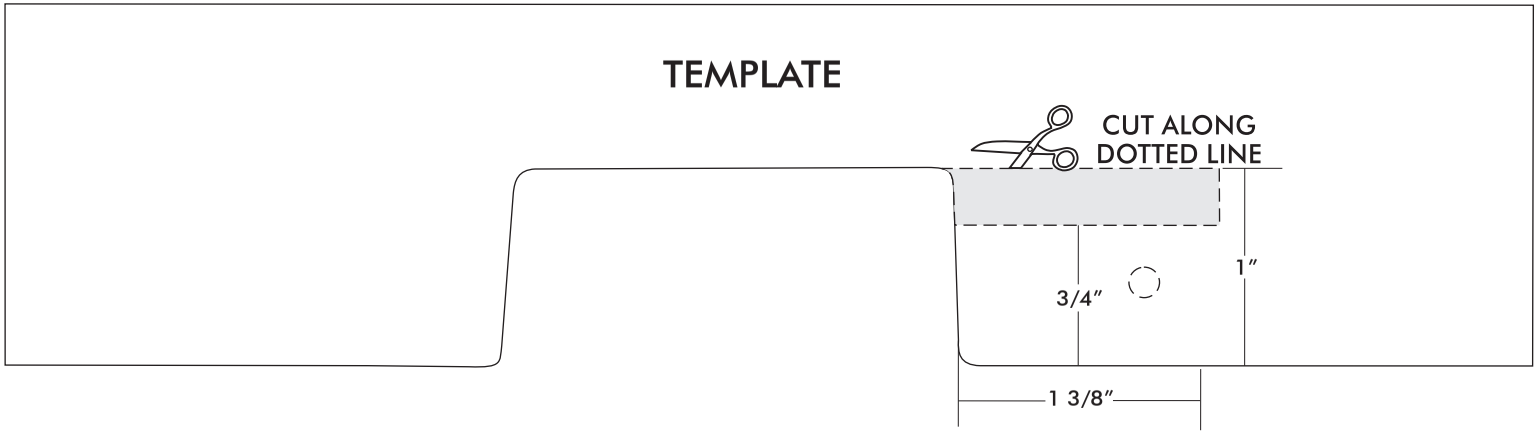

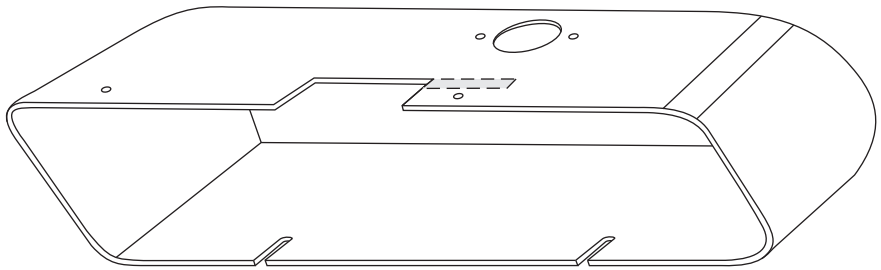

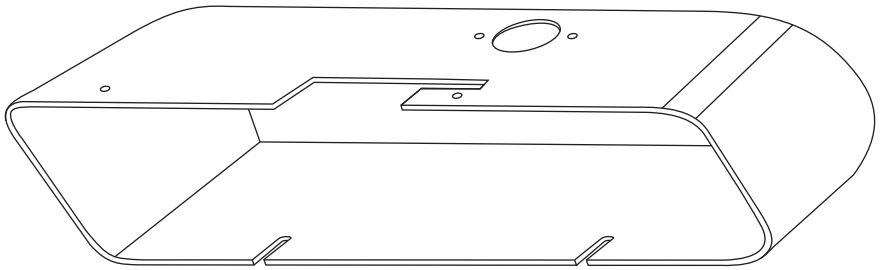

EVAPORATOR KIT PACKING LIST

EVAPORATOR KIT
561180

NO.	QTY.	PART NO.	DESCRIPTION	
1.	1	744004-VUE	GEN IV 4 VENT EVAP. SUB CASE w/ 204 ECU	_____
2.	1	781173	1979-81 CAMARO w/o AC ACC. KIT	_____

CHECKED BY: _____
PACKED BY: _____
DATE: _____

1

GEN IV 4 VENT EVAP. SUB CASE w/ 204 ECU 744004-VUE

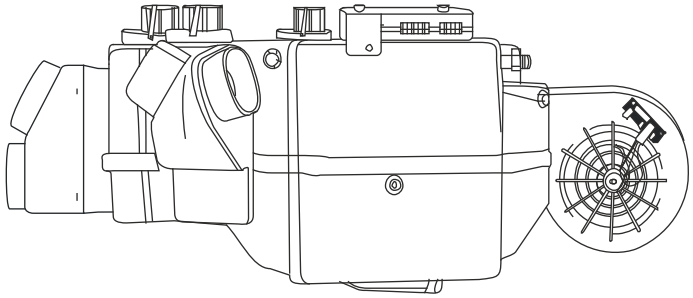

2

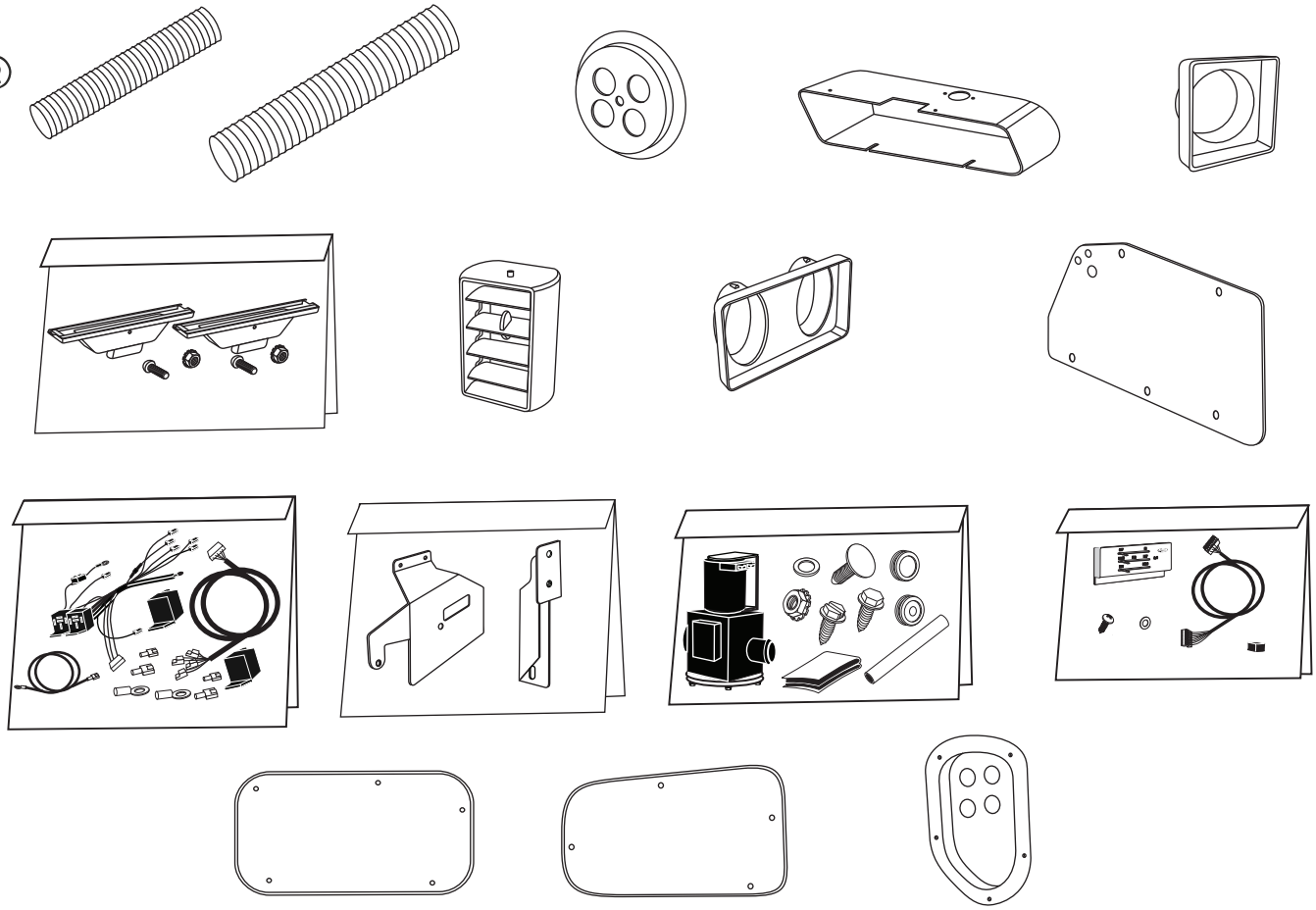

ACCESSORY KIT 781173

NOTE: IMAGES MAY NOT DEPICT ACTUAL PARTS AND QUANTITIES. REFER TO PACKING LIST FOR ACTUAL PARTS AND QUANTITIES.